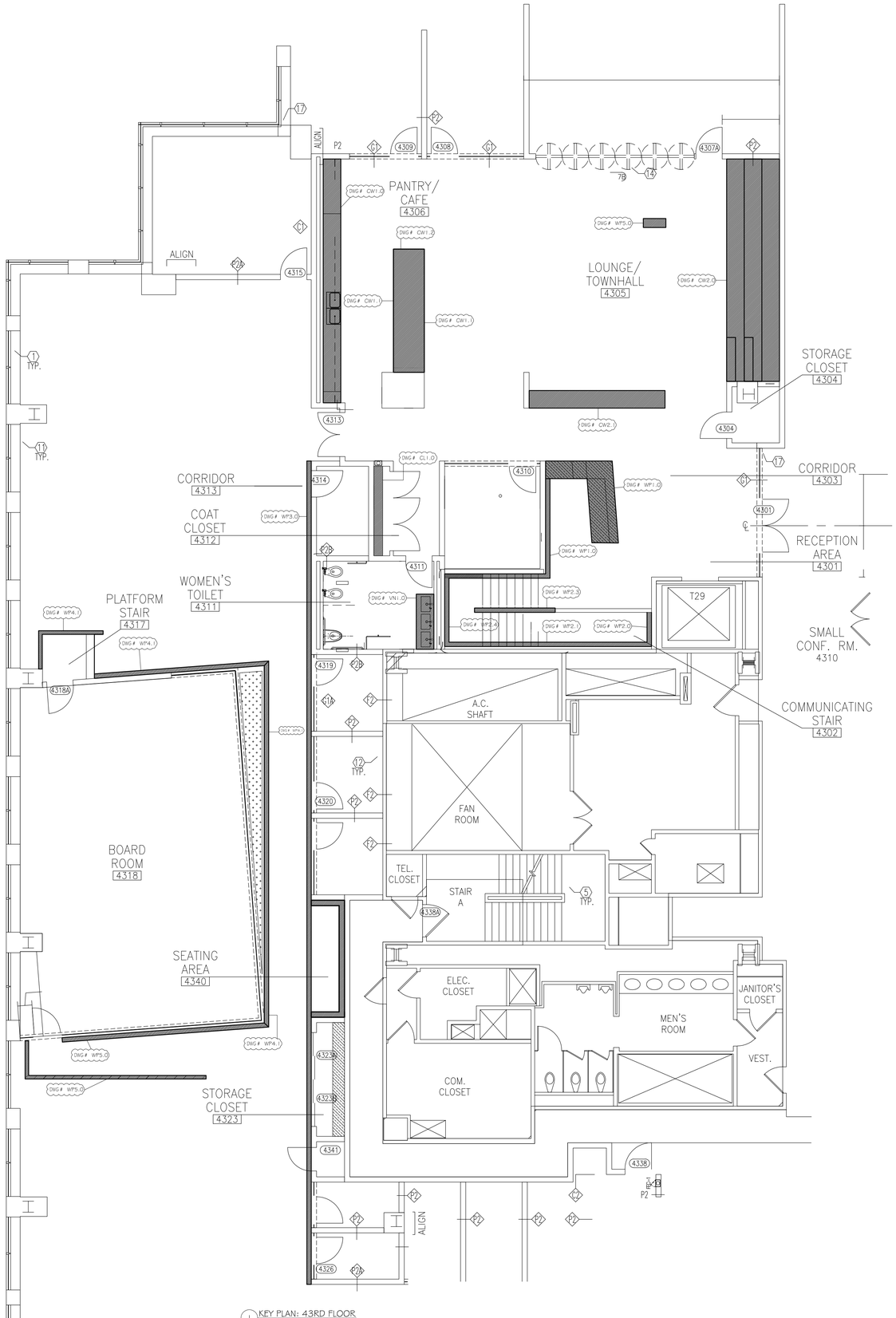

1 KEY PLAN: 43RD FLOOR
SCALE: NTS
REF: 1JA201.00

PLASTIC LAMINATE

PL-1	ROBIN REIGI #33516 CANYON HOLZFAELLER OAK.
PL-2	PIONITE #F5593 ANGEL WHITE, SUEDE FINISH
PL-3	PIONITE #SE101 BLACK, SUEDE FINISH
PL-4	PIONITE #SG228 SLATE, SUEDE FINISH
PL-5	FORMICA DECOMETAL #M2178-99 BRUSHED STAINLESS STEEL

WOOD, VENEER, MELAMINE

WD-1	ANDERSON PLYWOOD, $\frac{3}{4}$" THK. PHENOLIC BIRCH VENEER 13 PLY PLYWOOD, NATURAL FINISH
WD-2	
WD-3	
WD-4	
PF-1	
WB-1	SHOP PRIMED, FINAL PAINT B.O.
ML-1	WHITE MELAMINE
ML-2	BLACK MELAMINE
PRIMB	SHOP PRIMED, FINAL PAINT B.O.

SOLID SURFACE, STONE, METAL GLASS

SS-1	CEASARSTONE #2003 CONCRETE, $\frac{3}{4}$" THK. SQUARE EDGE DETAIL BY OTHERS
SS-2	CEASARSTONE #4004 RAW CONCRETE, $\frac{3}{4}$" THK. SQUARE EDGE DETAIL BY OTHERS
ST-1	
ST-2	
MT-1	$\frac{3}{4}$" X 2" X 2" STEEL TUBE, PAINTED BLACK
MT-2	
GL-1	
GL-2	

HARDAWARE

H-1	HINGES: BLUM CLIP TOP 110° CONCEALED HINGES, SELF CLOSING, SOFT CLOSE
H-2	DRAWER SLIDES: RICHELIEU #38322G24, FULL EXTENSION, 24", SOFT CLOSE
H-3	SHELF PINS: RICHELIEU #12352180, NICKLE FINISH
H-4	CAM LOCK
H-5	Z-CLIP: MONARCH METAL FABRICATION #MF375
H-6	CLOSET ROD: RICHELIEU #122208140, 1 $\frac{1}{4}$" DIA, CHROME FINISH
H-7	CLOSET ROD FLANGE: RICHELIEU # 8764114140, 1 $\frac{1}{4}$" DIA. CHROME FINISH
H-8	CENTERLINE STD. GRANITE COUNTERTOP SUPPORT BRACKET 15" LENGTH
H-9	STEEL OUTRIGGER
H-10	$\frac{3}{4}$" x 1 $\frac{1}{2}$" X 1 $\frac{1}{2}$" ALUMINUM ANGLE
H-11	CAM LOCK
H-12	4" BLACK METAL GROMMET
H-13	

MISCELLANEOUS

UP-1	
M-1	
M-2	
M-3	

CONSTRUCTION SPECIFICATIONS

- ☐ LEED
- ☐ FSC
- ☐ QCP
- ☒ A.W.I.- PREMIUM GRADE
- ☐ A.W.I.- CUSTUM GRADE
- ☐ A.W.I.- ECONOMY GRADE

ELEVATOR DIMENSIONS	
HEIGHT	
WIDTH	
DEPTH	
DOOR HEIGHT	
DOOR WIDTH	

☒ PRELIMINARY DRAWING FOR APPROVAL- ALL DIMENSIONS TO BE VERIFIED

☐ FINAL DRAWING- DIMENSION VERIFIED APPROVED FOR CONSTRUCTION

#	DATE	REVISION
8		
7		
6		
5		
4		
3		
2		
1	10-21-17	REVISED PER ARCHITECTURAL RED LINES

DRAWING SET REFERENCE	DRAWINGS DATED: 11-7-16 ISSUED FOR BID	JOB #: 4180
TITLE	KEY PLAN 43RD FLOOR	
JOB	RAUXA - 43RD & 44TH FLOORS	
LOCATION	225 LIBERTY STREET NEW YORK, NY	
GENERAL CONTRACTOR	HOLT CONSTRUCTION CORPORATION	DWG #: KP-1.0
ARCHITECT	SPECTORGROUP	
FILE: 4-RD-Rauxa-43rd and Tower - Models - 17-10-17.dwg	BY: D.G.K. M.G.	DATE: 9-19-17

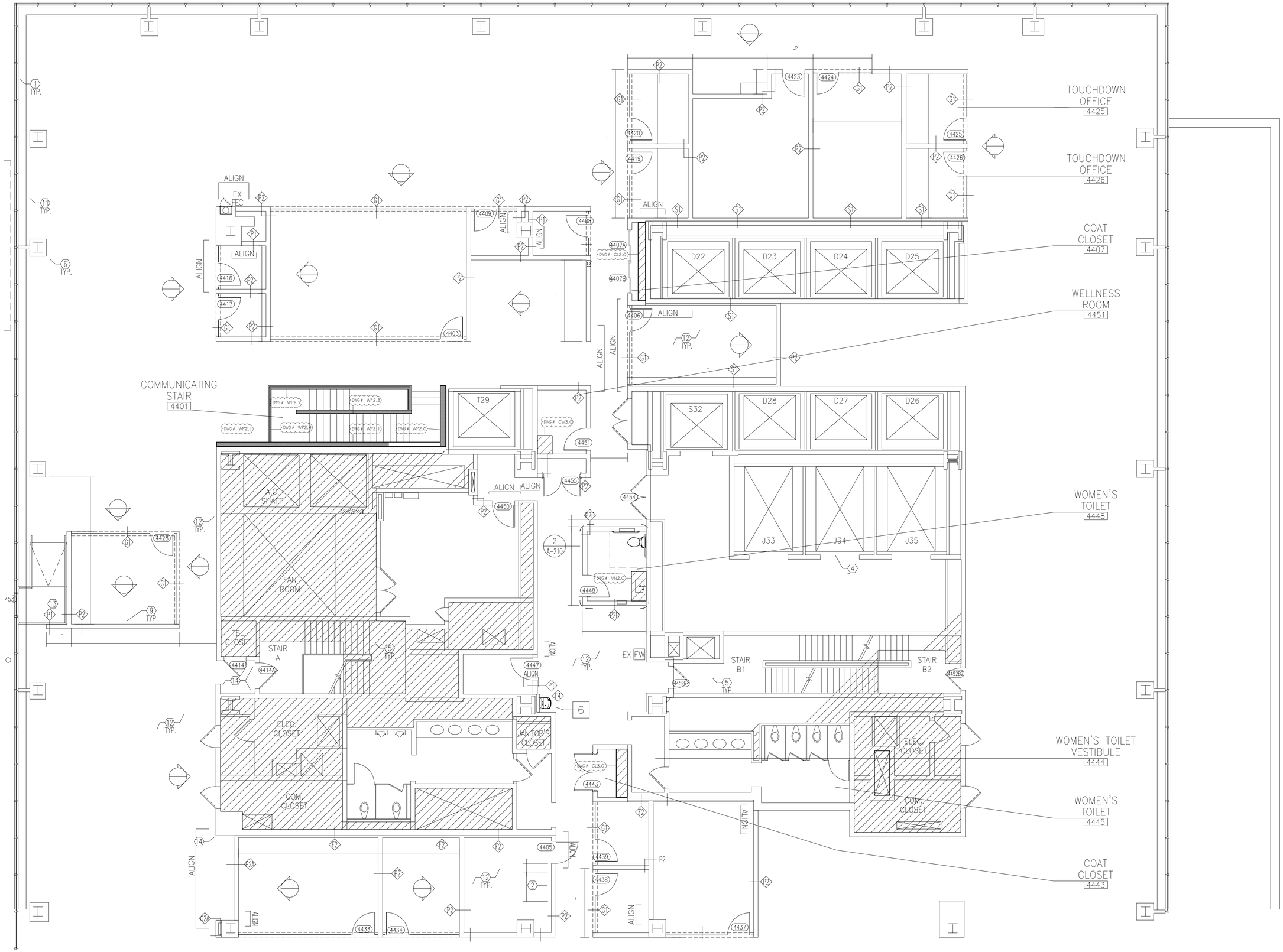

1 KEY PLAN: 44TH FLOOR
SCALE: NTS
REF: 1/A201.00

PLASTIC LAMINATE

PL-1	ROBIN REIGI #33516 CANYON HOLZFAELLER OAK
PL-2	PIONITE #FS593 ANGEL WHITE, SUEDE FINISH
PL-3	PIONITE #SE101 BLACK, SUEDE FINISH
PL-4	PIONITE #SG228 SLATE, SUEDE FINISH
PL-5	FORMICA DECOMETAL #M2178-99 BRUSHED STAINLESS STEEL

WOOD, VENEER, MELAMINE

WD-1	ANDERSON PLYWOOD, 3/4" THK. PHENOLIC BIRCH VENEER 13 PLY PLYWOOD, NATURAL FINISH
WD-2	
WD-3	
WD-4	
PF-1	
WB-1	SHOP PRIMED, FINAL PAINT B.O.
ML-1	WHITE MELAMINE
ML-2	BLACK MELAMINE
PRIME	SHOP PRIMED, FINAL PAINT B.O.

SOLID SURFACE, STONE, METAL GLASS

SS-1	CEASARSTONE #2003 CONCRETE, 3/4" THK. SQUARE EDGE DETAIL BY OTHERS
SS-2	CEASARSTONE #4004 RAW CONCRETE, 3/4" THK. SQUARE EDGE DETAIL BY OTHERS
ST-1	
ST-2	
MT-1	1/8" X 2" X 2" STEEL TUBE, PAINTED BLACK
MT-2	
GL-1	
GL-2	

HARDAWARE

H-1	HINGES: BLUM CLIP TOP 110° CONCEALED HINGES, SELF CLOSING, SOFT CLOSE
H-2	DRAWER SLIDES: RICHELIEU #38322G24, FULL EXTENSION, 24", SOFT CLOSE
H-3	SHELF PINS: RICHELIEU #12352180, NICKLE FINISH
H-4	CAM LOCK
H-5	Z-CLIP: MONARCH METAL FABRICATION #MF375
H-6	CLOSET ROD: RICHELIEU #122208140, 1 1/4" DIA, CHROME FINISH
H-7	CLOSET ROD FLANGE: RICHELIEU # 8764114140, 1 1/4" DIA. CHROME FINISH
H-8	CENTERLINE STD. GRANITE COUNTERTOP SUPPORT BRACKET 15" LENGTH
H-9	STEEL OUTRIGGER
H-10	1/8" x 1 1/2" X 1 1/2" ALUMINUM ANGLE
H-11	CAM LOCK
H-12	4" BLACK METAL GROMMET
H-13	

MISCELLANEOUS

UP-1	
M-1	
M-2	
M-3	

CONSTRUCTION SPECIFICATIONS

- ☐ LEED
- ☐ FSC
- ☐ QCP
- ☒ A.W.I.- PREMIUM GRADE
- ☐ A.W.I.- CUSTUM GRADE
- ☐ A.W.I.- ECONOMY GRADE

ELEVATOR DIMENSIONS

HEIGHT	
WIDTH	
DEPTH	
DOOR HEIGHT	
DOOR WIDTH	

☒ PRELIMINARY DRAWING FOR APPROVAL- ALL DIMENSIONS TO BE VERIFIED

☐ FINAL DRAWING- DIMENSION VERIFIED APPROVED FOR CONSTRUCTION

#	DATE	REVISION
8		
7		
6		
5		
4		
3		
2		
1	10-21-17	REVISED PER ARCHITECTURAL RED LINES

DRAWING SET REFERENCE	DRAWINGS DATED: 11-7-16 ISSUED FOR BID	JOB #: 4180
TITLE	KEY PLAN 44TH FLOOR	
JOB	RAUXA - 43RD & 44TH FLOORS	
LOCATION	225 LIBERTY STREET NEW YORK, NY	
GENERAL CONTRACTOR	HOLT CONSTRUCTION CORPORATION	DWG #: KP-2.0
ARCHITECT	SPECTORGROUP	
FILE: 4180-Rauxa-43rd&44th Floors-Wilson-10-30-17.dwg	BY: D.G.R. M.G. DATE: 9-19-17	

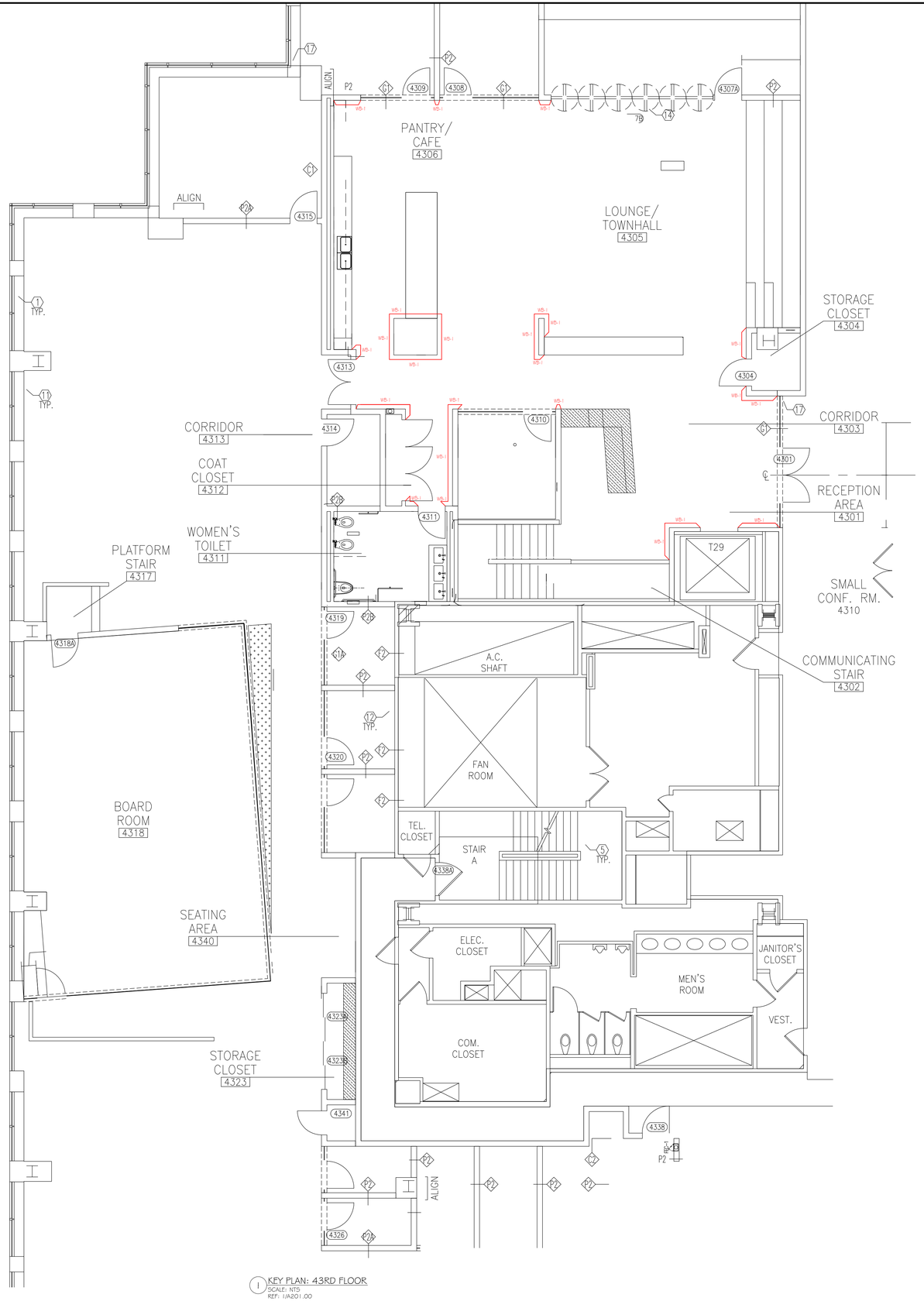

1 KEY PLAN: 43RD FLOOR
SCALE: NTS
REF: 1/A201.00

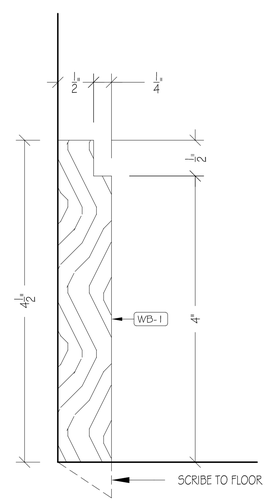

2 VERTICAL SECTION
SCALE: FULL
REF:

PLASTIC LAMINATE

PL-1	ROBIN REIGI #33516 CANYON HOLZFAELLER OAK.
PL-2	PIONITE #F5593 ANGEL WHITE, SUEDE FINISH
PL-3	PIONITE #SE101 BLACK, SUEDE FINISH
PL-4	PIONITE #SG228 SLATE, SUEDE FINISH
PL-5	FORMICA DECOMETAL #M2178-99 BRUSHED STAINLESS STEEL

WOOD, VENEER, MELAMINE

WD-1	ANDERSON PLYWOOD, 3/4" THK. PHENOLIC BIRCH VENEER 13 PLY PLYWOOD, NATURAL FINISH
WD-2	
WD-3	
WD-4	
PF-1	
WB-1	SHOP PRIMED, FINAL PAINT B.O.
ML-1	WHITE MELAMINE
ML-2	BLACK MELAMINE
PRIMB	SHOP PRIMED, FINAL PAINT B.O.

SOLID SURFACE, STONE, METAL GLASS

SS-1	CEASARSTONE #2003 CONCRETE, 3/4" THK. SQUARE EDGE DETAIL BY OTHERS
SS-2	CEASARSTONE #4004 RAW CONCRETE, 3/4" THK. SQUARE EDGE DETAIL BY OTHERS
ST-1	
ST-2	
MT-1	3/4" X 2" X 2" STEEL TUBE, PAINTED BLACK
MT-2	
GL-1	
GL-2	

HARDAWARE

H-1	HINGES: BLUM CLIP TOP 110° CONCEALED HINGES, SELF CLOSING, SOFT CLOSE
H-2	DRAWER SLIDES: RICHELIEU #38322G24, FULL EXTENSION, 24", SOFT CLOSE
H-3	SHELF PINS: RICHELIEU #12352180, NICKLE FINISH
H-4	CAM LOCK
H-5	Z-CLIP: MONARCH METAL FABRICATION #MF375
H-6	CLOSET ROD: RICHELIEU #122208140, 1 1/2" DIA, CHROME FINISH
H-7	CLOSET ROD FLANGE: RICHELIEU # 8764114140, 1 1/2" DIA. CHROME FINISH
H-8	CENTERLINE STD. GRANITE COUNTERTOP SUPPORT BRACKET 15" LENGTH
H-9	STEEL OUTRIGGER
H-10	1/4" x 1 1/2" X 1 1/2" ALUMINUM ANGLE
H-11	CAM LOCK
H-12	4" BLACK METAL GROMMET
H-13	

MISCELLANEOUS

UP-1	
M-1	
M-2	
M-3	

CONSTRUCTION SPECIFICATIONS

- ☐ LEED
- ☐ FSC
- ☐ GCP
- ☒ A.W.I.- PREMIUM GRADE
- ☐ A.W.I.- CUSTUM GRADE
- ☐ A.W.I.- ECONOMY GRADE

ELEVATOR DIMENSIONS	
HEIGHT	
WIDTH	
DEPTH	
DOOR HEIGHT	
DOOR WIDTH	

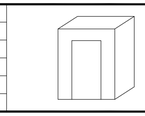

☒ PRELIMINARY DRAWING FOR APPROVAL- ALL DIMENSIONS TO BE VERIFIED

☐ FINAL DRAWING- DIMENSION VERIFIED APPROVED FOR CONSTRUCTION

#	DATE	REVISION
8		
7		
6		
5		
4		
3		
2		
1		

DRAWING SET REFERENCE	DRAWINGS DATED: 11-7-16 ISSUED FOR BID
TITLE	BASE PLAN 43RD FLOOR
JOB	RAUXA - 43RD & 44TH FLOORS
LOCATION	225 LIBERTY STREET NEW YORK, NY
GENERAL CONTRACTOR	HOLT CONSTRUCTION CORPORATION
ARCHITECT	SPECTORGROUP
FILE: 4-80-Rauxa-43rd-44th Floors-Mission-15.55-7.dwg	BY: DGR MGO DATE: 9-19-17

JOB #: 4180

DWG #: BP-1.0

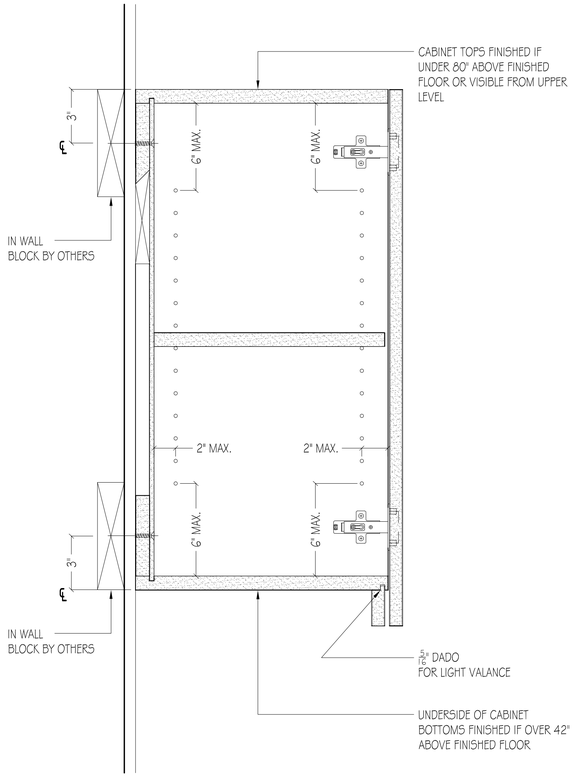

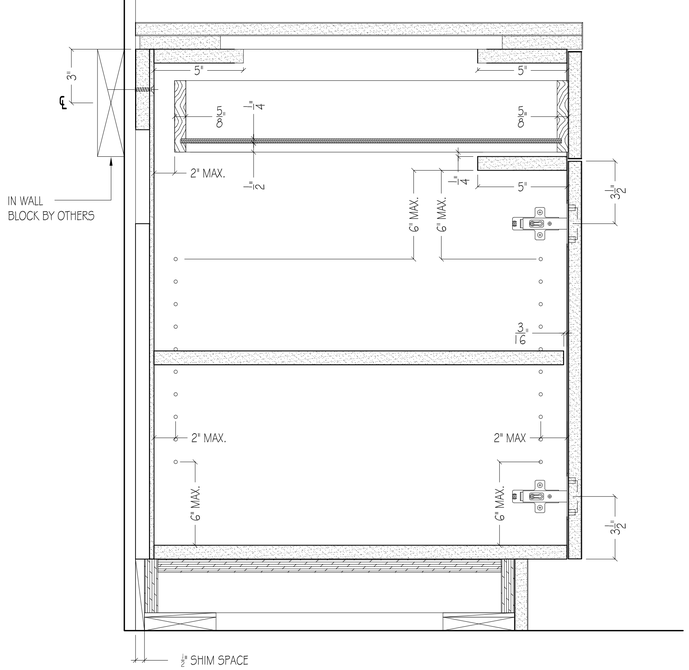

1 DETAILED VERTICAL SECTION
SCALE: 3" = 1'-0"
REF: N/A

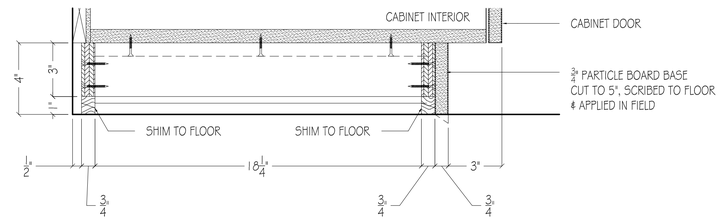

8 LADDER BASE DETAIL
SCALE: 3" = 1'-0"
REF: N/A

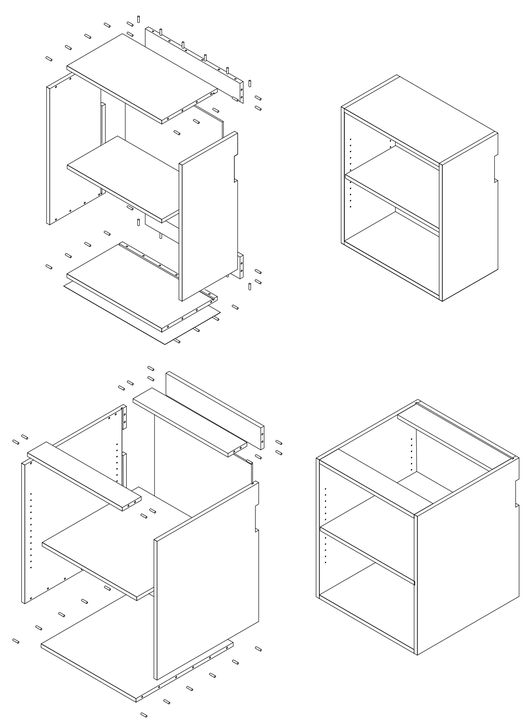

CASEWORK BODY

CORE MATERIAL:	3/4" PARTICLEBOARD
	(SHELVES TO BE 1"THICK IF 42" OR GREATER)
BACK MATERIAL:	1/4" PARTICLEBOARD
EXPOSED SURFACE:	HIGH PRESSURE PLASTIC LAMINATE
JOINERY TYPE:	DOWEL CONSTRUCTION

8mm x 30mm WOOD DOWELS
96mm MAXIMUM SPACING BETWEEN DOWELS

37.5mm — EQ. — EQ. — EQ. — EQ. — 37.5mm

DOORS & DRAWER FRONTS

CORE MATERIAL:	11/16" PARTICLEBOARD
FACE/ INSIDE FACE:	HIGH PRESSURE PLASTIC LAMINATE (UNLESS OTHERWISE NOTED)
GRAIN DIR. @ DWR FACE:	VERTICAL
GRAIN MATCH:	YES

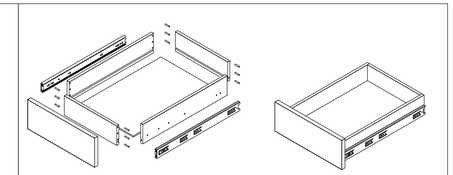

DRAWER BOX

CORE MATERIAL:	1/2" PARTICLEBOARD
BOTTOM MATERIAL:	1/4" PARTICLEBOARD
JOINERY TYPE:	DOWEL CONSTRUCTION (5mm X 25mm)
	GROOVE (BOTTOM)
NOTES:	MOUNTED ON HEAVY DUTY DRAWER SLIDES
	*PREMIUM GRADE– DRAWER BOXES TO BE PREFINISHED BIRCH, DOVE TAIL JOINTS

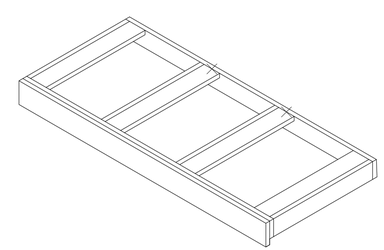

LADDER BASE

CORE MATERIAL:	3/4" PLYWOOD
EXPOSED MATERIAL:	11/16" PARTICLEBOARD
	1 SIDE HIGH PRESSURE PLASTIC LAM, 1 SIDE BACKER
NOTES:	3" STRETCHER, 12" MAXIMUM SPACING

GENERAL NOTES:

1. PLUMBING/ FIXTURES BY OTHERS
2. ELECTRICAL/ FIXTURES BY OTHERS
3. PAINTING/ FINISHING BY OTHERS
4. ALL BLOCKING FOR CASEWORK ANCHORAGE IS BY OTHERS
5. CASEWORK SHELF SPAN TO COMPLY WITH W.I. MANUAL
6. ALL CONSTRUCTION IS BASED ON LATEST EDITION OF THE ARCHITECTURAL WOODWORK STANDARDS UNLESS SPECIFIED OTHERWISE
7. ALL RUBBER, VINYL, OR FINISH BASE TO BE SUPPLIED BY OTHERS
8. LOCKS SUPPLIED ONLY WHERE INDICATED
9. SHEFL LOCATION AND QUANTITY SUPPLIED ONLY WHERE INDICATED

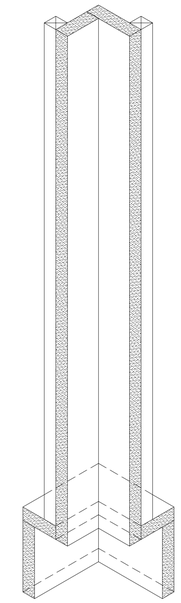

6 BASE CABINET FILLER
SCALE: 3" = 1'-0"
REF: N/A

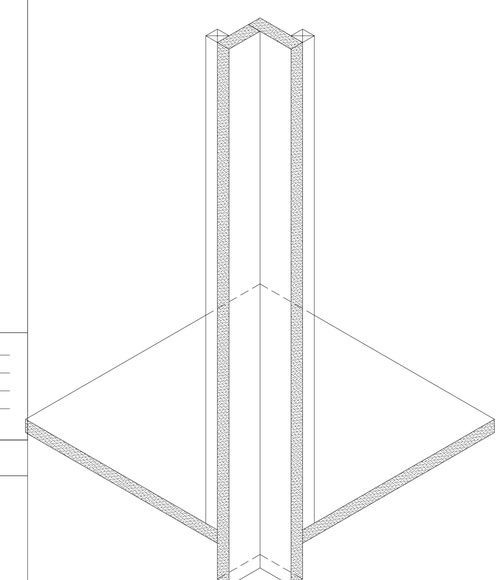

7 WALL CABINET FILLER
SCALE: 3" = 1'-0"
REF: N/A

PLASTIC LAMINATE

PL-1	ROBIN REIGI #33516 CANYON HOLZFAELLER OAK
PL-2	PIONITE #F5593 ANGEL WHITE, SUEDE FINISH
PL-3	PIONITE #SE101 BLACK, SUEDE FINISH
PL-4	PIONITE #SG228 SLATE, SUEDE FINISH
PL-5	FORMICA DECOMETAL #M2178-99 BRUSHED STAINLESS STEEL

WOOD, VENEER, MELAMINE

WD-1	ANDERSON PLYWOOD, 3/4" THK. PHENOLIC BIRCH VENEER 13 PLY PLYWOOD, NATURAL FINISH
WD-2	
WD-3	
WD-4	
PF-1	
WB-1	SHOP PRIMED, FINAL PAINT B.O.
ML-1	WHITE MELAMINE
ML-2	BLACK MELAMINE
PRIMB	SHOP PRIMED, FINAL PAINT B.O.

SOLID SURFACE, STONE, METAL GLASS

SS-1	CEASARSTONE #2003 CONCRETE, 3/4" THK. SQUARE EDGE DETAIL BY OTHERS
SS-2	CEASARSTONE #4004 RAW CONCRETE, 3/4" THK. SQUARE EDGE DETAIL BY OTHERS
ST-1	
ST-2	
MT-1	3/4" X 2" X 2" STEEL TUBE, PAINTED BLACK
MT-2	
GL-1	
GL-2	

HARDAWARE

H-1	HINGES: BLUM CLIP TOP 110° CONCEALED HINGES, SELF CLOSING, SOFT CLOSE
H-2	DRAWER SLIDES: RICHELIEU #38322G24, FULL EXTENSION, 24", SOFT CLOSE
H-3	SHELF PINS: RICHELIEU #12352180, NICKLE FINISH
H-4	CAM LOCK
H-5	Z-CLIP: MONARCH METAL FABRICATION #MF375
H-6	CLOSET ROD: RICHELIEU #122208140, 1 1/4" DIA, CHROME FINISH
H-7	CLOSET ROD FLANGE: RICHELIEU # 8764114140, 1 1/4" DIA. CHROME FINISH
H-8	CENTERLINE STD. GRANITE COUNTERTOP SUPPORT BRACKET 15" LENGTH
H-9	STEEL OUTRIGGER
H-10	1/4" x 1 1/2" X 1 1/2" ALUMINUM ANGLE
H-11	CAM LOCK
H-12	4" BLACK METAL GROMMET
H-13	

MISCELLANEOUS

UP-1	
M-1	
M-2	
M-3	

CONSTRUCTION SPECIFICATIONS

- ☐ LEED
- ☐ FSC
- ☐ GCP
- ☒ A.W.I.- PREMIUM GRADE
- ☐ A.W.I.- CUSTUM GRADE
- ☐ A.W.I.- ECONOMY GRADE

ELEVATOR DIMENSIONS	
HEIGHT	
WIDTH	
DEPTH	
DOOR HEIGHT	
DOOR WIDTH	

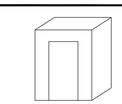

☒ PRELIMINARY DRAWING FOR APPROVAL- ALL DIMENSIONS TO BE VERIFIED

☐ FINAL DRAWING- DIMENSION VERIFIED APPROVED FOR CONSTRUCTION

#	DATE	REVISION
8		
7		
6		
5		
4		
3		
2		
1		

DRAWING SET REFERENCE	DRAWINGS DATED:	JOB #: 4180
TITLE	DETAILS	
JOB	RALIXA - 43RD & 44TH FLOORS	
LOCATION	225 LIBERTY STREET NEW YORK, NY	
GENERAL CONTRACTOR	HOLT CONSTRUCTION CORPORATION	DWG #: DET-1.0
ARCHITECT	SPECTORGROUP	
FILE: 4-RS-Rzxx-43rd-44th Floors-Wkspc-17.03.17.dwg	BY: D.G.R. M.G.	DATE: 9-19-17

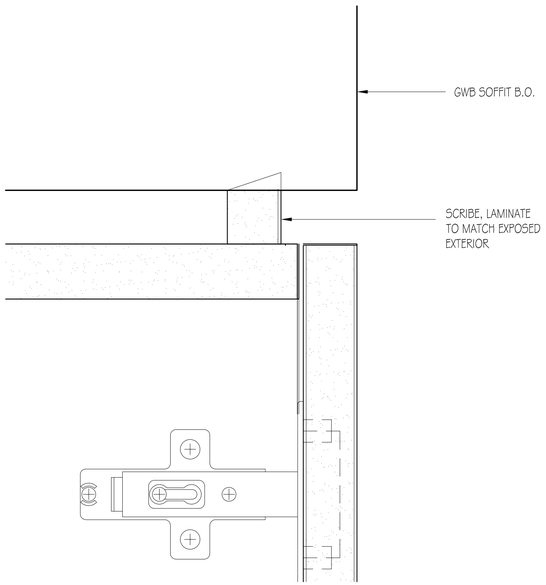

10 ADJUSTABLE SCRIBE DETAIL
SCALE: 3" = 1'-0"
REF: N/A

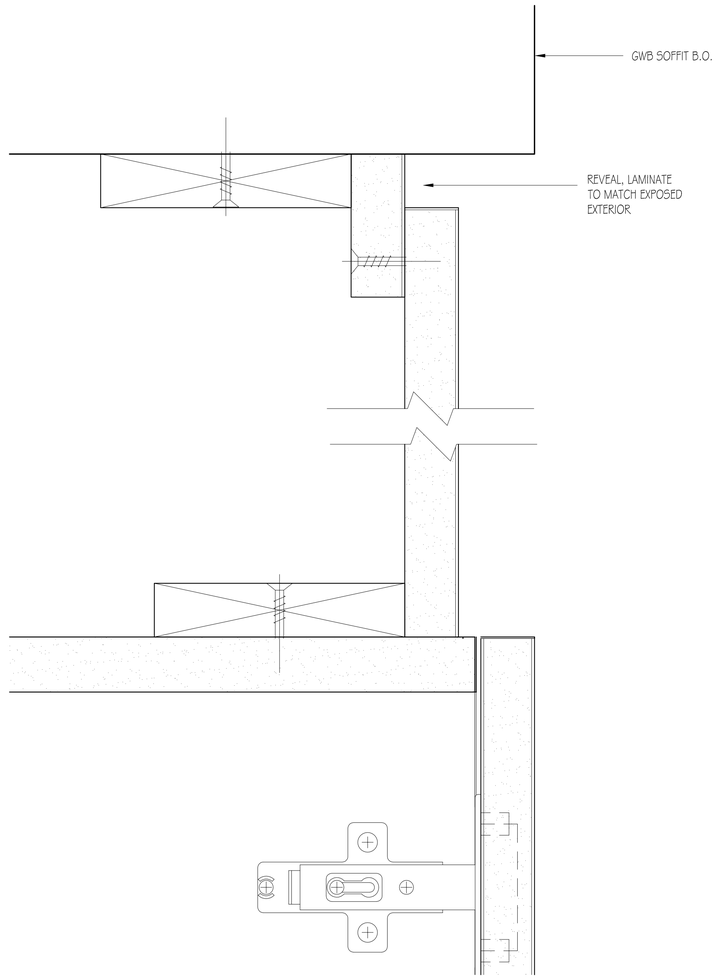

11 PLASTIC LAMINATE SOFFIT PANEL DETAIL
SCALE: 3" = 1'-0"
REF: N/A

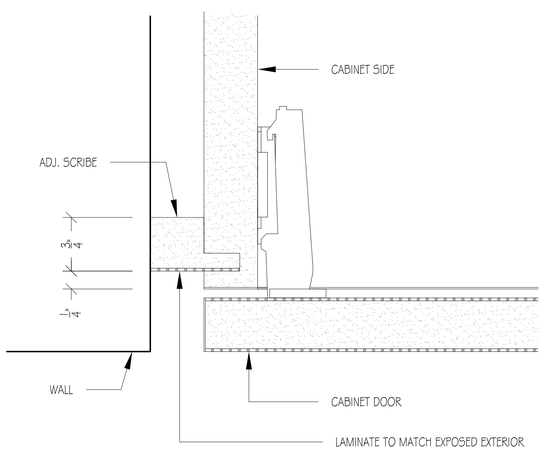

3 ADJUSTABLE SCRIBE DETAIL
SCALE: FULL
REF: N/A

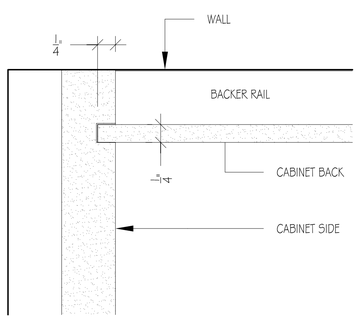

4 CABINET BACK GROOVE DETAIL
SCALE: FULL
REF: N/A

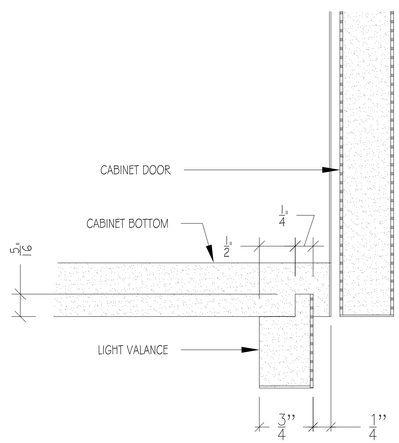

5 LIGHT VALANCE DETAIL
SCALE: FULL
REF: N/A

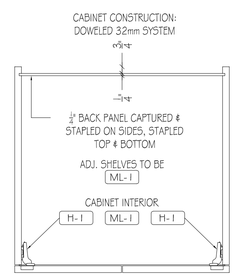

1 TYP. HORIZONTAL SECTION @ BASE CABINET
SCALE: 1-1/2" = 1'-0"
REF:

NOTE:
TO MAINTAIN ADA CLEARANCE, FLOORS MUST BE PERFECTLY LEVEL OR THE APRON MUST BE REDUCED ACCORDINGLY.

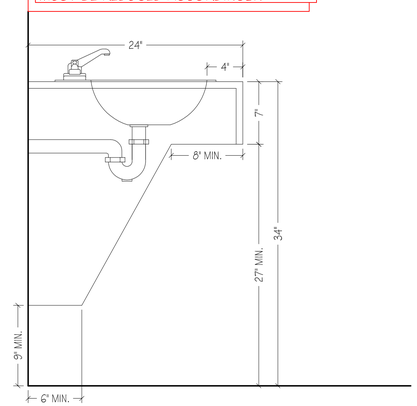

2 REQ'D ADA CLEARANCES
SCALE: 1-1/2" = 1'-0"
REF:

PLASTIC LAMINATE

PL-1	ROBIN REIGI #33516 CANYON HOLZFAELLER OAK.
PL-2	PIONITE #F5593 ANGEL WHITE, SUEDE FINISH
PL-3	PIONITE #SE101 BLACK, SUEDE FINISH
PL-4	PIONITE #SG228 SLATE, SUEDE FINISH
PL-5	FORMICA DECOMETAL #M2178-99 BRUSHED STAINLESS STEEL

WOOD, VENEER, MELAMINE

WD-1	ANDERSON PLYWOOD, 3/4" THK. PHENOLIC BIRCH VENEER 13 PLY PLYWOOD, NATURAL FINISH
WD-2	
WD-3	
WD-4	
PF-1	
WB-1	SHOP PRIMED, FINAL PAINT B.O.
ML-1	WHITE MELAMINE
ML-2	BLACK MELAMINE
PRIMB	SHOP PRIMED, FINAL PAINT B.O.

SOLID SURFACE, STONE, METAL GLASS

SS-1	CEASARSTONE #2003 CONCRETE, 3/4" THK. SQUARE EDGE DETAIL BY OTHERS
SS-2	CEASARSTONE #4004 RAW CONCRETE, 3/4" THK. SQUARE EDGE DETAIL BY OTHERS
ST-1	
ST-2	
MT-1	3/4" X 2" X 2" STEEL TUBE, PAINTED BLACK
MT-2	
GL-1	
GL-2	

HARDAWARE

H-1	HINGES: BLUM CLIP TOP 110° CONCEALED HINGES, SELF CLOSING, SOFT CLOSE
H-2	DRAWER SLIDES: RICHELIEU #38322G24, FULL EXTENSION, 24", SOFT CLOSE
H-3	SHELF PINS: RICHELIEU #12352180, NICKLE FINISH
H-4	CAM LOCK
H-5	Z-CLIP: MONARCH METAL FABRICATION #MF375
H-6	CLOSET ROD: RICHELIEU #122208140, 1 1/4" DIA, CHROME FINISH
H-7	CLOSET ROD FLANGE: RICHELIEU # 8764114140, 1 1/4" DIA. CHROME FINISH
H-8	CENTERLINE STD. GRANITE COUNTERTOP SUPPORT BRACKET 15" LENGTH
H-9	STEEL OUTRIGGER
H-10	3/4" x 1 1/2" X 1 1/2" ALUMINUM ANGLE
H-11	CAM LOCK
H-12	4" BLACK METAL GROMMET
H-13	

MISCELLANEOUS

UP-1	
M-1	
M-2	
M-3	

CONSTRUCTION SPECIFICATIONS

- ☐ LEED
- ☐ FSC
- ☐ QCP
- ☒ A.W.I.- PREMIUM GRADE
- ☐ A.W.I.- CUSTUM GRADE
- ☐ A.W.I.- ECONOMY GRADE

ELEVATOR DIMENSIONS	
HEIGHT	
WIDTH	
DEPTH	
DOOR HEIGHT	
DOOR WIDTH	

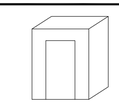

☒ PRELIMINARY DRAWING FOR APPROVAL- ALL DIMENSIONS TO BE VERIFIED

☐ FINAL DRAWING- DIMENSION VERIFIED APPROVED FOR CONSTRUCTION

#	DATE	REVISION
8		
7		
6		
5		
4		
3		
2		
1		

DRAWING SET REFERENCE	DRAWINGS DATED:	JOB #: 4180
TITLE	DETAILS	
JOB	RAUXA - 43RD & 44TH FLOORS	
LOCATION	225 LIBERTY STREET NEW YORK, NY	
GENERAL CONTRACTOR	HOLT CONSTRUCTION CORPORATION	DWG #: DET-1.1
ARCHITECT	SPECTORGROUP	
FILE: 4-50-Rauxa-43rd&44th Floors-Interior-17.55-17.dwg	BY: D.G.R. M.G.	DATE: 9-19-17

DOOR SCHEDULE

FLOOR	DOOR # & LOCATION				DOOR								FRAME/HEADER			HARDWARE SET B.O.	ELEVATION	COMMENTS
	DOOR #	WALL THK	FROM	TO	TYPE	SWING	SIZE	DOOR WIDTH	DOOR HEIGHT	UNDERCUT	MATERIAL	FINISH	MATERIAL	FINISH	HEADER LENGTH			
43RD	4312A	7-1/4"	CORRIDOR 4303	COAT CLOSET 4312	D-2	RHR	(1-1/2) PAIR, (3) LEAVES 1-3/4" X 108" X 96"	35-13/16"	95-1/4"	5/8"	MDO	PRIME	POPLAR	PRIME	108"	6	1	
	4312B				D-2	RHR												
	4312C				D-2	LHR												
44TH	4443	7-1/4"	CORRIDOR 4432	COAT CLOSET 4443	D-2	LHR/RHR	(1) PAIR, (2) LEAVES, 1-3/4" X 72" X 96"	35-13/16"	95-1/4"	5/8"	MDO	PRIME	POPLAR	PRIME	72"	14	2	

REFER TO APPROVED HARDWARE SCHEDULE FROM HARDWARE VENDOR

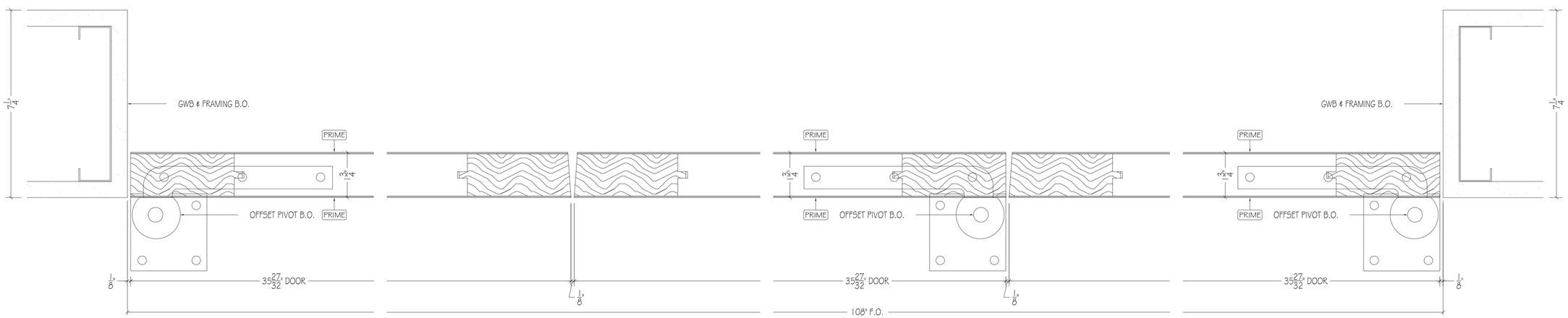

3 HORIZONTAL SECTION 43RD 4312C 43RD 4312B 43RD 4312A
SCALE: 6" = 1'-0"
REF: J-2/A-290.00

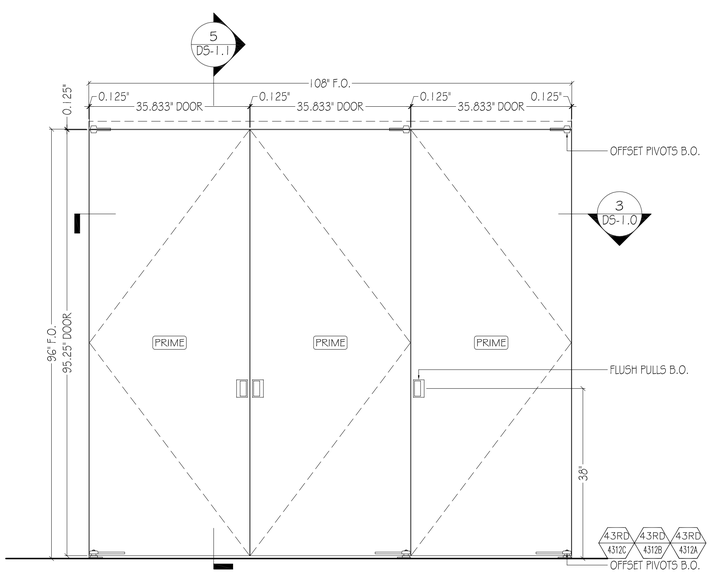

1 ELEVATION: DOOR TYPE D-2
SCALE: 3/4" = 1'-0"
REF: D-2/A-290.00

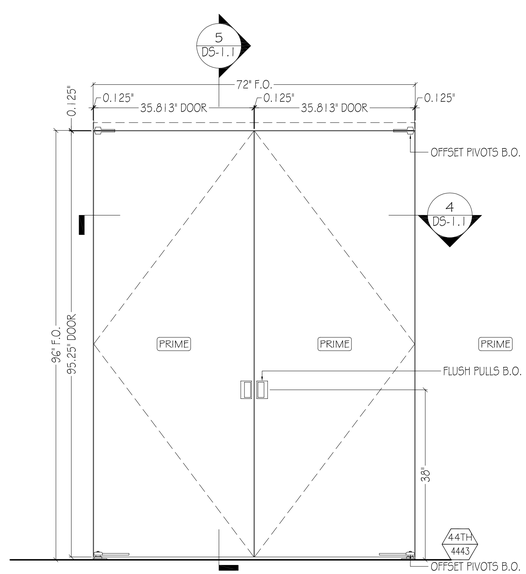

2 ELEVATION: DOOR TYPE D-2
SCALE: 3/4" = 1'-0"
REF: D-2/A-290.00

PLASTIC LAMINATE

PL-1	ROBIN REIGI #33516 CANYON HOLZFAELLER OAK.
PL-2	PIONITE #F5593 ANGEL WHITE, SUEDE FINISH
PL-3	PIONITE #SE101 BLACK, SUEDE FINISH
PL-4	PIONITE #SG228 SLATE, SUEDE FINISH
PL-5	FORMICA DECOMETAL #M2178-99 BRUSHED STAINLESS STEEL

WOOD, VENEER, MELAMINE

WD-1	ANDERSON PLYWOOD, 3/4" THK. PHENOLIC BIRCH VENEER 13 PLY PLYWOOD, NATURAL FINISH
WD-2	
WD-3	
WD-4	
PF-1	
WB-1	SHOP PRIMED, FINAL PAINT B.O.
ML-1	WHITE MELAMINE
ML-2	BLACK MELAMINE
PRIME	SHOP PRIMED, FINAL PAINT B.O.

SOLID SURFACE, STONE, METAL GLASS

SS-1	CEASARSTONE #2003 CONCRETE, 3/4" THK. SQUARE EDGE DETAIL BY OTHERS
SS-2	CEASARSTONE #4004 RAW CONCRETE, 3/4" THK. SQUARE EDGE DETAIL BY OTHERS
ST-1	
ST-2	
MT-1	3/4" X 2" X 2" STEEL TUBE, PAINTED BLACK
MT-2	
GL-1	
GL-2	

HARDAWARE

H-1	HINGES: BLUM CLIP TOP 110° CONCEALED HINGES, SELF CLOSING, SOFT CLOSE
H-2	DRAWER SLIDES: RICHELIEU #38322G24, FULL EXTENSION, 24", SOFT CLOSE
H-3	SHELF PINS: RICHELIEU #12352180, NICKLE FINISH
H-4	CAM LOCK
H-5	Z-CLIP: MONARCH METAL FABRICATION #MF375
H-6	CLOSET ROD: RICHELIEU #122208140, 1 1/4" DIA, CHROME FINISH
H-7	CLOSET ROD FLANGE: RICHELIEU # 8764114140, 1 3/4" DIA. CHROME FINISH
H-8	CENTERLINE STD. GRANITE COUNTERTOP SUPPORT BRACKET 15" LENGTH
H-9	STEEL OUTRIGGER
H-10	3/4" x 1 3/4" X 1 3/4" ALUMINUM ANGLE
H-11	CAM LOCK
H-12	4" BLACK METAL GROMMET
H-13	

MISCELLANEOUS

UP-1	
M-1	
M-2	
M-3	

CONSTRUCTION SPECIFICATIONS

- ☐ LEED
- ☐ FSC
- ☐ GCP
- ☒ A.W.I.- PREMIUM GRADE
- ☐ A.W.I.- CUSTUM GRADE
- ☐ A.W.I.- ECONOMY GRADE

ELEVATOR DIMENSIONS	
HEIGHT	
WIDTH	
DEPTH	
DOOR HEIGHT	
DOOR WIDTH	

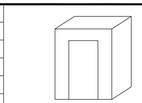

☒ PRELIMINARY DRAWING FOR APPROVAL- ALL DIMENSIONS TO BE VERIFIED

☐ FINAL DRAWING- DIMENSION VERIFIED APPROVED FOR CONSTRUCTION

#	DATE	REVISION
8		
7		
6		
5		
4		
3		
2		
1		

DRAWING SET REFERENCE	DRAWINGS DATED:	JOB #: 4180
TITLE	DOOR TYPE D-2	
JOB	RAUXA - 43RD & 44TH FLOORS	
LOCATION	225 LIBERTY STREET NEW YORK, NY	
GENERAL CONTRACTOR	HOLT CONSTRUCTION CORPORATION	DWG #: DS-1.0
ARCHITECT	SPECTORGROUP	
FILE: 4-RD-Rauxa-43rd-44th Floors-Woods - 15.03-7.dwg	BY: DGR MG	DATE: 9-19-17

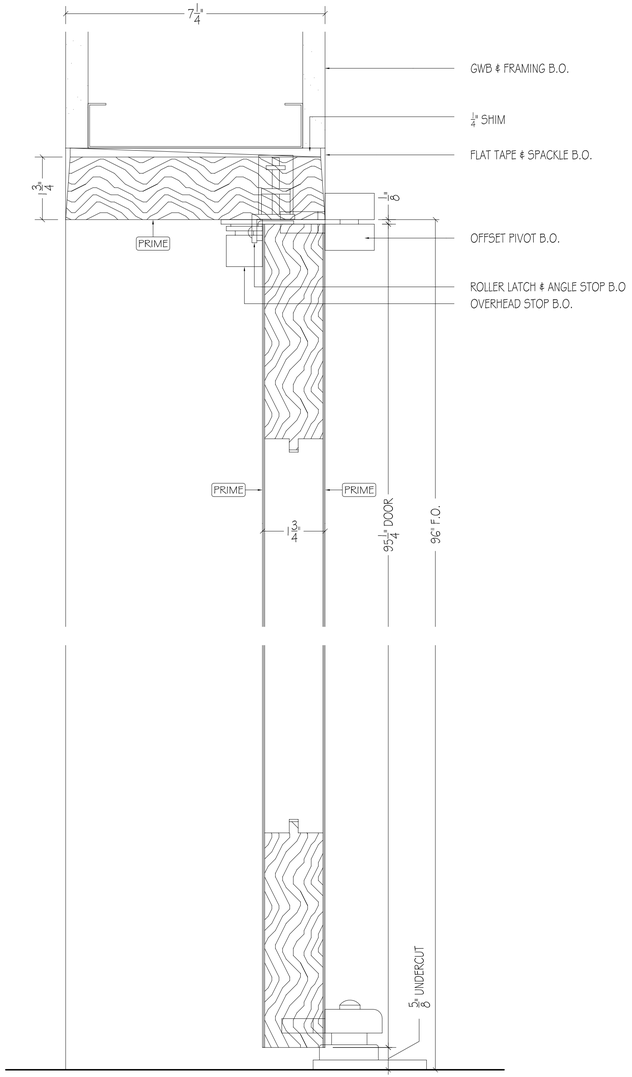

5 VERTICAL SECTION 43RD 4312C 43RD 4312B 43RD 4312A 44TH 4443
SCALE: 6" = 1'-0"
REF: 11-2/A-290.00

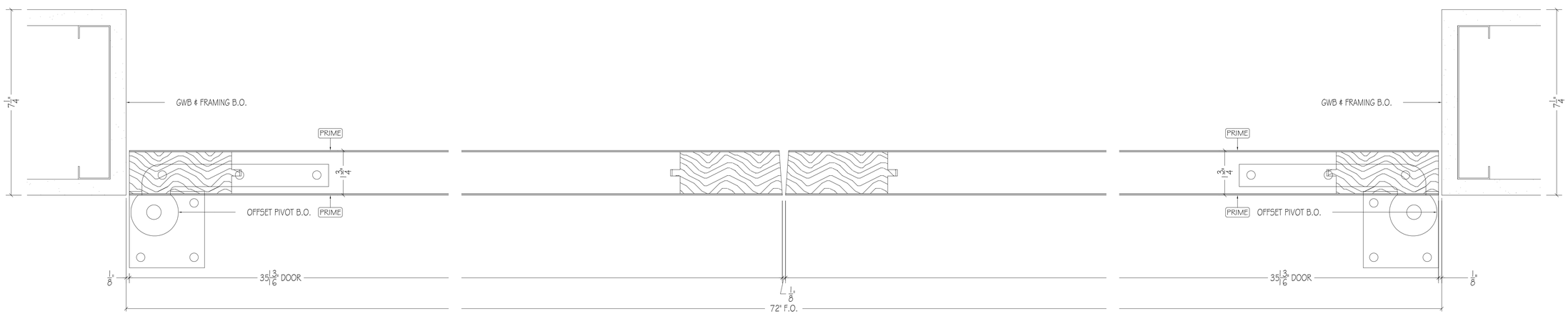

4 HORIZONTAL SECTION 44TH 4443
SCALE: 6" = 1'-0"
REF: 1-2/A-290.00

PLASTIC LAMINATE

PL-1	ROBIN REIGI #33516 CANYON HOLZFAELLER OAK.
PL-2	PIONITE #F5593 ANGEL WHITE, SUEDE FINISH
PL-3	PIONITE #SE101 BLACK, SUEDE FINISH
PL-4	PIONITE #SG228 SLATE, SUEDE FINISH
PL-5	FORMICA DECOMETAL #M2178-99 BRUSHED STAINLESS STEEL

WOOD, VENEER, MELAMINE

WD-1	ANDERSON PLYWOOD, 3/4" THK. PHENOLIC BIRCH VENEER 13 PLY PLYWOOD, NATURAL FINISH
WD-2	
WD-3	
WD-4	
PF-1	
WB-1	SHOP PRIMED, FINAL PAINT B.O.
ML-1	WHITE MELAMINE
ML-2	BLACK MELAMINE
PRIME	SHOP PRIMED, FINAL PAINT B.O.

SOLID SURFACE, STONE, METAL GLASS

SS-1	CEASARSTONE #2003 CONCRETE, 3/4" THK. SQUARE EDGE DETAIL BY OTHERS
SS-2	CEASARSTONE #4004 RAW CONCRETE, 3/4" THK. SQUARE EDGE DETAIL BY OTHERS
ST-1	
ST-2	
MT-1	3/4" X 2" X 2" STEEL TUBE, PAINTED BLACK
MT-2	
GL-1	
GL-2	

HARDAWARE

H-1	HINGES: BLUM CLIP TOP 110° CONCEALED HINGES, SELF CLOSING, SOFT CLOSE
H-2	DRAWER SLIDES: RICHELIEU #38322G24, FULL EXTENSION, 24", SOFT CLOSE
H-3	SHELF PINS: RICHELIEU #12352180, NICKLE FINISH
H-4	CAM LOCK
H-5	Z-CLIP: MONARCH METAL FABRICATION #MF375
H-6	CLOSET ROD: RICHELIEU #12220B140, 1 1/4" DIA, CHROME FINISH
H-7	CLOSET ROD FLANGE: RICHELIEU # 8764114140, 1 1/4" DIA. CHROME FINISH
H-8	CENTERLINE STD. GRANITE COUNTERTOP SUPPORT BRACKET 15" LENGTH
H-9	STEEL OUTRIGGER
H-10	3/4" x 1 1/2" X 1 1/2" ALUMINUM ANGLE
H-11	CAM LOCK
H-12	4" BLACK METAL GROMMET
H-13	

MISCELLANEOUS

UP-1	
M-1	
M-2	
M-3	

CONSTRUCTION SPECIFICATIONS

- ☐ LEED
- ☐ FSC
- ☐ QCP
- ☒ A.W.I.- PREMIUM GRADE
- ☐ A.W.I.- CUSTUM GRADE
- ☐ A.W.I.- ECONOMY GRADE

ELEVATOR DIMENSIONS	
HEIGHT	
WIDTH	
DEPTH	
DOOR HEIGHT	
DOOR WIDTH	

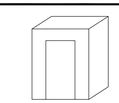

☒ PRELIMINARY DRAWING FOR APPROVAL- ALL DIMENSIONS TO BE VERIFIED

☐ FINAL DRAWING- DIMENSION VERIFIED APPROVED FOR CONSTRUCTION

#	DATE	REVISION
8		
7		
6		
5		
4		
3		
2		
1		

DRAWING SET REFERENCE	DRAWINGS DATED:	JOB #: 4180
TITLE	DOOR TYPE D-2	
JOB	RAUXA - 43RD & 44TH FLOORS	
LOCATION	225 LIBERTY STREET NEW YORK, NY	
GENERAL CONTRACTOR	HOLT CONSTRUCTION CORPORATION	DWG #: DS-1.1
ARCHITECT	SPECTORGROUP	
FILE: 4-50-Raxa-03-44 4443 Floors - Minorb - 17.03.17.dwg	BY: D.G.R. M.G.	DATE: 9-19-17

DOOR SCHEDULE

FLOOR	DOOR # & LOCATION				DOOR								FRAME/HEADER			HARDWARE SET B.O.	ELEVATION	COMMENTS
	DOOR #	WALL THK	FROM	TO	TYPE	SWING	SIZE	DOOR WIDTH	DOOR HEIGHT	UNDERCUT	MATERIAL	FINISH	MATERIAL	FINISH	HEADER LENGTH			
43RD	4323A	7-1/4"	OPEN WORKSTATIONS 4324	STORAGE CLOSET 4323	D-5	SLIDING	(4) LEAVES 1-3/4" X 128" X 96"	32-3/4"	95-5/16"	5/8"	MDO	PRIME	POPLAR	PRIME	128"	9	1	
	4323B																	
44TH	4407A	7-1/4"	CORRIDOR 4405	COAT CLOSET 4407	D-5	SLIDING	(4) LEAVES 1-3/4" X 104" X 96"	35-11/32"	95-5/16"	5/8"	MDO	PRIME	POPLAR	PRIME	104"	9	2	
	4407B																	

REFER TO APPROVED HARDWARE SCHEDULE FROM HARDWARE VENDOR

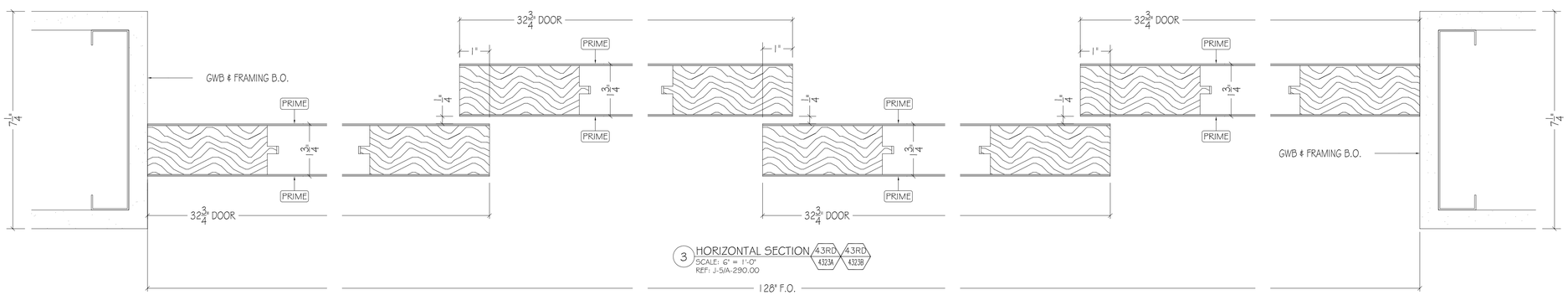

3 HORIZONTAL SECTION 43RD 4323A 43RD 4323B
SCALE: 6" = 1'-0"
REF: J-5/A-290.00

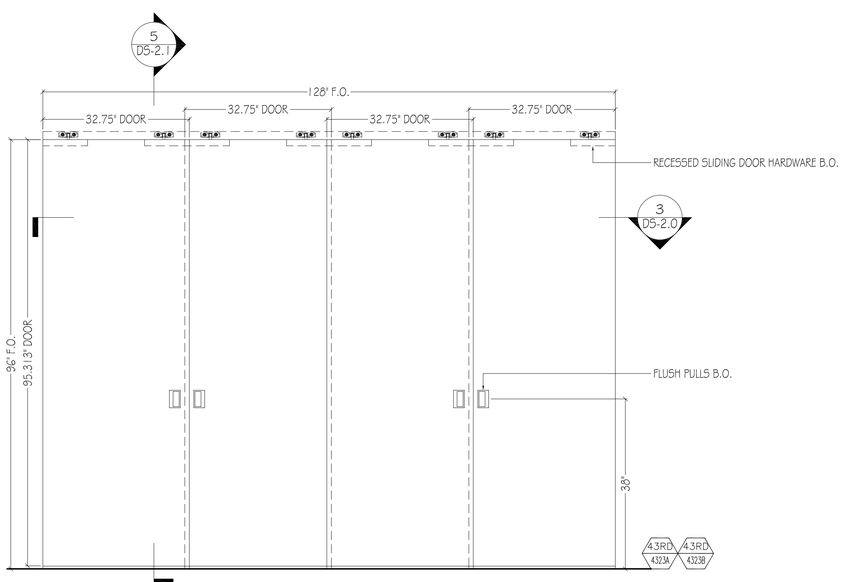

1 ELEVATION: DOOR TYPE D-5
SCALE: 3/4" = 1'-0"
REF: D-5/A-290.00

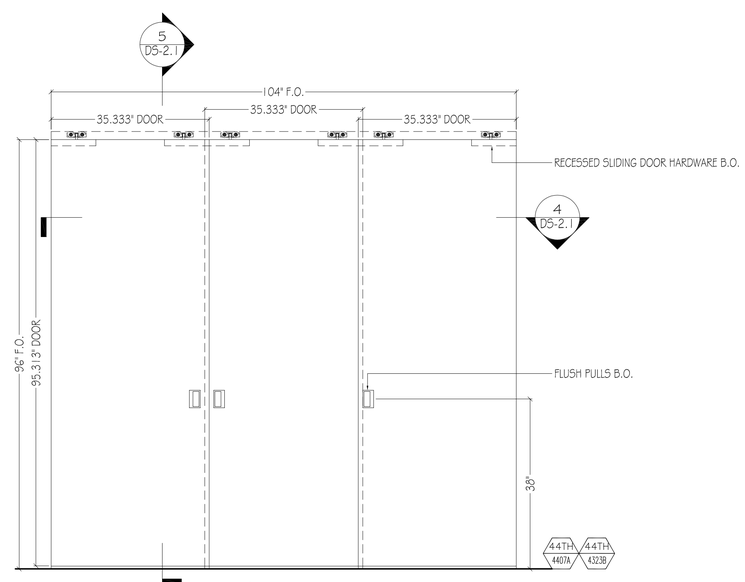

2 ELEVATION: DOOR TYPE D-5
SCALE: 3/4" = 1'-0"
REF: D-5/A-290.00

PLASTIC LAMINATE

- PL-1 ROBIN REIGI #33516 CANYON HOLZFAELLER OAK.
- PL-2 PIONITE #F5593 ANGEL WHITE, SUEDE FINISH
- PL-3 PIONITE #SE101 BLACK, SUEDE FINISH
- PL-4 PIONITE #SG228 SLATE, SUEDE FINISH
- PL-5 FORMICA DECOMETAL #M2178-99 BRUSHED STAINLESS STEEL

WOOD, VENEER, MELAMINE

- WD-1 ANDERSON PLYWOOD, $\frac{3}{4}$" THK. PHENOLIC BIRCH VENEER 13 PLY PLYWOOD, NATURAL FINISH
- WD-2
- WD-3
- WD-4
- PF-1
- WB-1 SHOP PRIMED, FINAL PAINT B.O.
- ML-1 WHITE MELAMINE
- ML-2 BLACK MELAMINE
- PRIME SHOP PRIMED, FINAL PAINT B.O.

SOLID SURFACE, STONE, METAL GLASS

- SS-1 CEASARSTONE #2003 CONCRETE, $\frac{3}{4}$" THK. SQUARE EDGE DETAIL BY OTHERS
- SS-2 CEASARSTONE #4004 RAW CONCRETE, $\frac{3}{4}$" THK. SQUARE EDGE DETAIL BY OTHERS
- ST-1
- ST-2
- MT-1 $\frac{3}{4}$" X 2" X 2" STEEL TUBE, PAINTED BLACK
- MT-2
- GL-1
- GL-2

HARDAWARE

- H-1 HINGES: BLUM CLIP TOP 110° CONCEALED HINGES, SELF CLOSING, SOFT CLOSE
- H-2 DRAWER SLIDES: RICHELIEU #38322G24, FULL EXTENSION, 24", SOFT CLOSE
- H-3 SHELF PINS: RICHELIEU #12352180, NICKLE FINISH
- H-4 CAM LOCK
- H-5 Z-CLIP: MONARCH METAL FABRICATION #MF375
- H-6 CLOSET ROD: RICHELIEU #122208140, 1 $\frac{1}{4}$" DIA, CHROME FINISH
- H-7 CLOSET ROD FLANGE: RICHELIEU # 8764114140, 1 $\frac{1}{4}$" DIA. CHROME FINISH
- H-8 CENTERLINE STD. GRANITE COUNTERTOP SUPPORT BRACKET 15" LENGTH
- H-9 STEEL OUTRIGGER
- H-10 $\frac{1}{4}$" x 1 $\frac{1}{2}$" X 1 $\frac{1}{2}$" ALUMINUM ANGLE
- H-11 CAM LOCK
- H-12 4" BLACK METAL GROMMET
- H-13

MISCELLANEOUS

- UP-1
- M-1
- M-2
- M-3

CONSTRUCTION SPECIFICATIONS

- ☐ LEED
- ☐ FSC
- ☐ GCP
- ☒ A.W.I.- PREMIUM GRADE
- ☐ A.W.I.- CUSTUM GRADE
- ☐ A.W.I.- ECONOMY GRADE

ELEVATOR DIMENSIONS	
HEIGHT	
WIDTH	
DEPTH	
DOOR HEIGHT	
DOOR WIDTH	

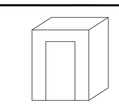

☒ PRELIMINARY DRAWING FOR APPROVAL- ALL DIMENSIONS TO BE VERIFIED

☐ FINAL DRAWING- DIMENSION VERIFIED APPROVED FOR CONSTRUCTION

#	DATE	REVISION
8		
7		
6		
5		
4		
3		
2		
1		

DRAWING SET REFERENCE	DRAWINGS DATED:	JOB #: 4180
TITLE	DOOR TYPE D-5	
JOB	RAUXA - 43RD & 44TH FLOORS	
LOCATION	225 LIBERTY STREET NEW YORK, NY	
GENERAL CONTRACTOR	HOLT CONSTRUCTION CORPORATION	DWG #: DS-2.0
ARCHITECT	SPECTORGROUP	
FILE: 4180-Rauxa-43rd & 44th Floors-Illinois-17.03.17.dwg	BY: D.G.R. M.G.	DATE: 9-19-17

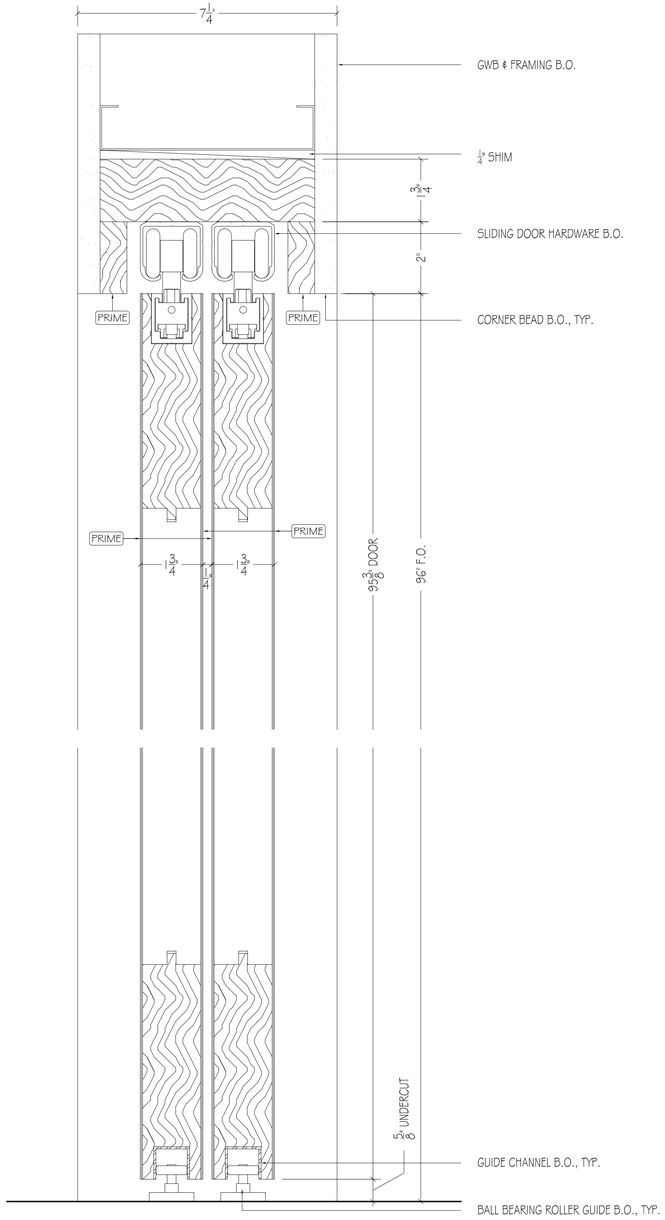

5 VERTICAL SECTION 43RD 43RD 44TH 44TH
SCALE: 6" = 1'-0"
REF: H-5/A-290.00
4323A 4323B 4407A 4323B

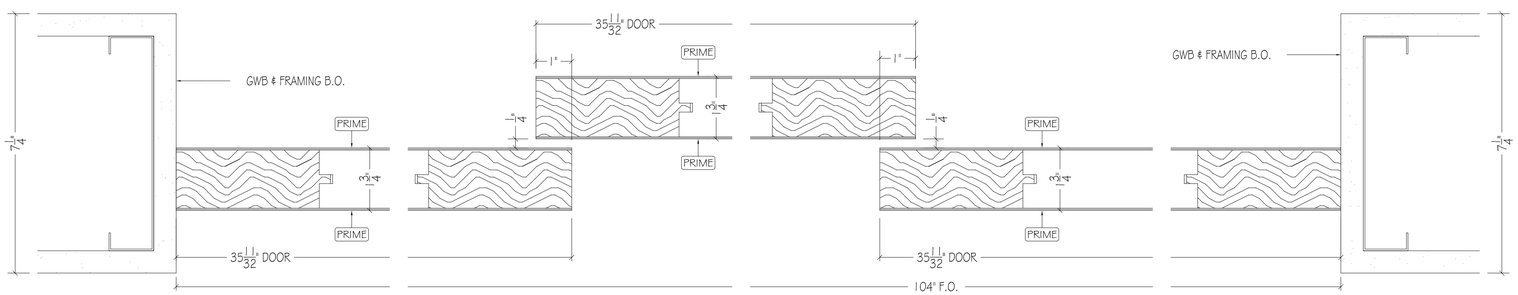

4 HORIZONTAL SECTION 44TH 44TH
SCALE: 6" = 1'-0"
REF: J-5/A-290.00
4407A 4323B

PLASTIC LAMINATE

PL-1	ROBIN REIGI #33516 CANYON HOLZFAELLER OAK.
PL-2	PIONITE #F5593 ANGEL WHITE, SUEDE FINISH
PL-3	PIONITE #SE101 BLACK, SUEDE FINISH
PL-4	PIONITE #SG228 SLATE, SUEDE FINISH
PL-5	FORMICA DECOMETAL #M2178-99 BRUSHED STAINLESS STEEL

WOOD, VENEER, MELAMINE

WD-1	ANDERSON PLYWOOD, 3/4" THK. PHENOLIC BIRCH VENEER 13 PLY PLYWOOD, NATURAL FINISH
WD-2	
WD-3	
WD-4	
PF-1	
WB-1	SHOP PRIMED, FINAL PAINT B.O.
ML-1	WHITE MELAMINE
ML-2	BLACK MELAMINE
PRIME	SHOP PRIMED, FINAL PAINT B.O.

SOLID SURFACE, STONE, METAL GLASS

SS-1	CEASARSTONE #2003 CONCRETE, 3/4" THK. SQUARE EDGE DETAIL BY OTHERS
SS-2	CEASARSTONE #4004 RAW CONCRETE, 3/4" THK. SQUARE EDGE DETAIL BY OTHERS
ST-1	
ST-2	
MT-1	3/4" X 2" X 2" STEEL TUBE, PAINTED BLACK
MT-2	
GL-1	
GL-2	

HARDAWARE

H-1	HINGES: BLUM CLIP TOP 110° CONCEALED HINGES, SELF CLOSING, SOFT CLOSE
H-2	DRAWER SLIDES: RICHELIEU #38322G24, FULL EXTENSION, 24", SOFT CLOSE
H-3	SHELF PINS: RICHELIEU #12352180, NICKLE FINISH
H-4	CAM LOCK
H-5	Z-CLIP: MONARCH METAL FABRICATION #MF375
H-6	CLOSET ROD: RICHELIEU #12220B140, 1 1/4" DIA, CHROME FINISH
H-7	CLOSET ROD FLANGE: RICHELIEU # 8764114140, 1 1/4" DIA. CHROME FINISH
H-8	CENTERLINE STD. GRANITE COUNTERTOP SUPPORT BRACKET 15" LENGTH
H-9	STEEL OUTRIGGER
H-10	3/8" x 1 1/2" X 1 1/2" ALUMINUM ANGLE
H-11	CAM LOCK
H-12	4" BLACK METAL GROMMET
H-13	

MISCELLANEOUS

UP-1	
M-1	
M-2	
M-3	

CONSTRUCTION SPECIFICATIONS

- ☐ LEED
- ☐ FSC
- ☐ GCP
- ☒ A.W.I.- PREMIUM GRADE
- ☐ A.W.I.- CUSTUM GRADE
- ☐ A.W.I.- ECONOMY GRADE

ELEVATOR DIMENSIONS

HEIGHT	
WIDTH	
DEPTH	
DOOR HEIGHT	
DOOR WIDTH	

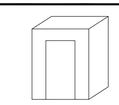

☒ PRELIMINARY DRAWING FOR APPROVAL- ALL DIMENSIONS TO BE VERIFIED

☐ FINAL DRAWING- DIMENSION VERIFIED APPROVED FOR CONSTRUCTION

#	DATE	REVISION
8		
7		
6		
5		
4		
3		
2		
1	10-21-17	REVISED PER ARCHITECTURAL RED LINES

DRAWING SET REFERENCE	DRAWINGS DATED:	JOB #: 4180
TITLE	DOOR TYPE D-5	
JOB	RALIXA - 43RD & 44TH FLOORS	
LOCATION	225 LIBERTY STREET NEW YORK, NY	
GENERAL CONTRACTOR	HOLT CONSTRUCTION CORPORATION	DWG #: DS-2.1
ARCHITECT	SPECTORGROUP	
FILE: 4-30-Rxxx-D-01-H-00-Tyxx-Wxxx-D-D-T.dwg	BY: D.G.R. M.G.	DATE: 9-19-17

ARCH. NOTE: GE MICROWAVE #PEB7226SFSS IS NO LONGER AVAILABLE. PLEASE ADVISE.

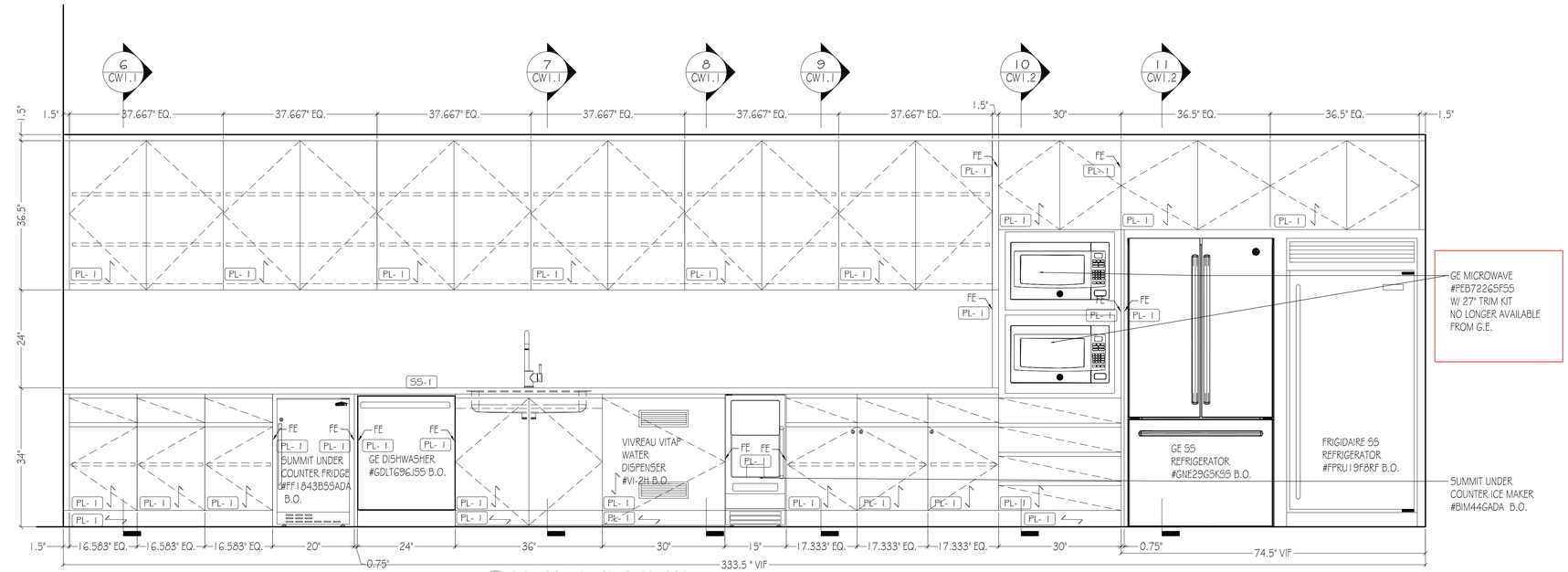

2 ELEVATION: PANTRY/CAFE 4306
SCALE: 3/4" = 1'-0"
REF: 2/A-600.00

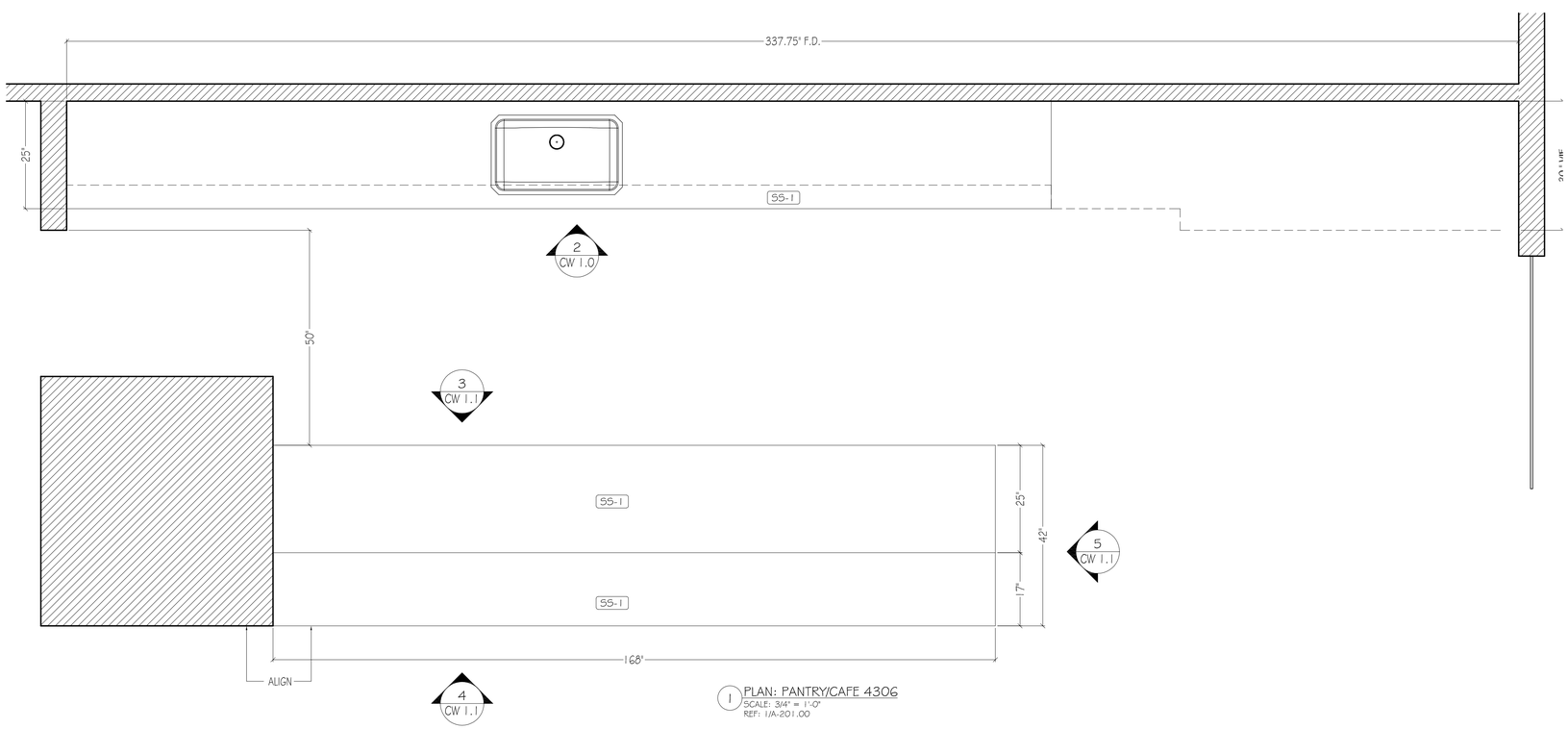

1 PLAN: PANTRY/CAFE 4306
SCALE: 3/4" = 1'-0"
REF: 1/A-201.00

PLASTIC LAMINATE

PL-1	ROBIN REIGI #33516 CANYON HOLZFAELLER OAK
PL-2	PIONITE #F5593 ANGEL WHITE, SUEDE FINISH
PL-3	PIONITE #SE101 BLACK, SUEDE FINISH
PL-4	PIONITE #SG228 SLATE, SUEDE FINISH
PL-5	FORMICA DECOMETAL #M2178-99 BRUSHED STAINLESS STEEL

WOOD, VENEER, MELAMINE

WD-1	ANDERSON PLYWOOD, $\frac{3}{4}$" THK. PHENOLIC BIRCH VENEER 13 PLY PLYWOOD, NATURAL FINISH
WD-2	
WD-3	
WD-4	
PF-1	
WB-1	SHOP PRIMED, FINAL PAINT B.O.
ML-1	WHITE MELAMINE
ML-2	BLACK MELAMINE
PRIME	SHOP PRIMED, FINAL PAINT B.O.

SOLID SURFACE, STONE, METAL GLASS

SS-1	CEASARSTONE #2003 CONCRETE, $\frac{3}{4}$" THK. SQUARE EDGE DETAIL BY OTHERS
SS-2	CEASARSTONE #4004 RAW CONCRETE, $\frac{3}{4}$" THK. SQUARE EDGE DETAIL BY OTHERS
ST-1	
ST-2	
MT-1	$\frac{1}{2}$" X 2" X 2" STEEL TUBE, PAINTED BLACK
MT-2	
GL-1	
GL-2	

HARDAWARE

H-1	HINGES: BLUM CLIP TOP 110° CONCEALED HINGES, SELF CLOSING, SOFT CLOSE
H-2	DRAWER SLIDES: RICHELIEU #38322224, FULL EXTENSION, 24", SOFT CLOSE
H-3	SHELF PINS: RICHELIEU #12352180, NICKLE FINISH
H-4	CAM LOCK
H-5	Z-CLIP: MONARCH METAL FABRICATION #MF375
H-6	CLOSET ROD: RICHELIEU #12208140, 1 $\frac{1}{2}$" DIA, CHROME FINISH
H-7	CLOSET ROD FLANGE: RICHELIEU # 87641114140, 1 $\frac{1}{2}$" DIA. CHROME FINISH
H-8	CENTERLINE STD. GRANITE COUNTERTOP SUPPORT BRACKET 15" LENGTH
H-9	STEEL OUTRIGGER
H-10	$\frac{3}{4}$" x 1 $\frac{1}{2}$" X 1 $\frac{1}{2}$" ALUMINUM ANGLE
H-11	CAM LOCK
H-12	4" BLACK METAL GROMMET
H-13	

MISCELLANEOUS

UP-1	
M-1	
M-2	
M-3	

CONSTRUCTION SPECIFICATIONS

- ☐ LEED
- ☐ FSC
- ☐ QCP
- ☒ A.W.I.- PREMIUM GRADE
- ☐ A.W.I.- CUSTUM GRADE
- ☐ A.W.I.- ECONOMY GRADE

ELEVATOR DIMENSIONS	
HEIGHT	
WIDTH	
DEPTH	
DOOR HEIGHT	
DOOR WIDTH	

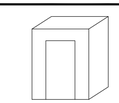

☒ PRELIMINARY DRAWING FOR APPROVAL- ALL DIMENSIONS TO BE VERIFIED

☐ FINAL DRAWING- DIMENSION VERIFIED APPROVED FOR CONSTRUCTION

#	DATE	REVISION
8		
7		
6		
5		
4		
3		
2		
1	10-21-17	REVISED PER ARCHITECTURAL RED LINES

DRAWING SET REFERENCE	DRAWINGS DATED:	JOB #: 4180
TITLE	PANTRY/CAFE 4306	
JOB	RAUXA - 43RD & 44TH FLOORS	
LOCATION	225 LIBERTY STREET NEW YORK, NY	
GENERAL CONTRACTOR	HOLT CONSTRUCTION CORPORATION	DWG #: CW-1.0
ARCHITECT	SPECTORGROUP	
FILE: 4-50-Rauxa-43rd & 44th Floors - Milwork - 17.03-17.dwg	BY: D.G.R. M.G.	DATE: 9-19-17

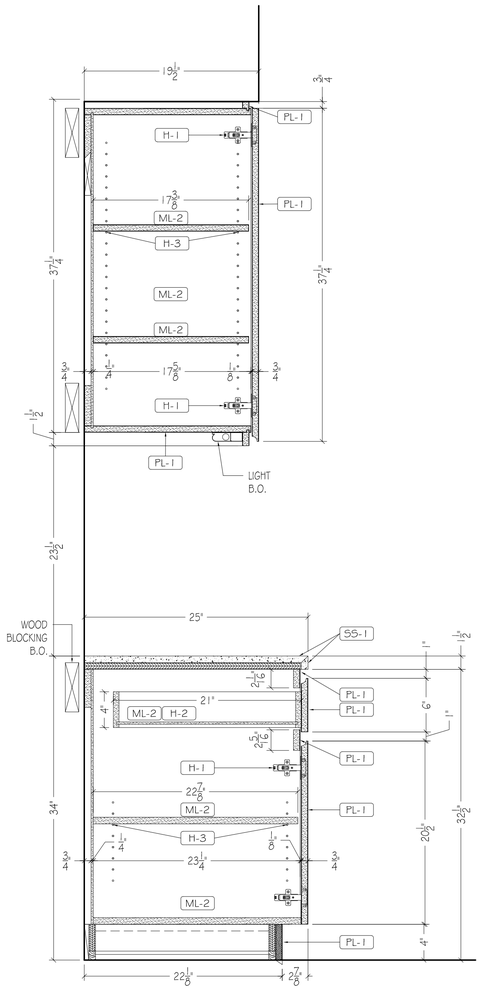

6 VERTICAL SECTION
SCALE: 1-1/2" = 1'-0"
REF: 02/A-08.502

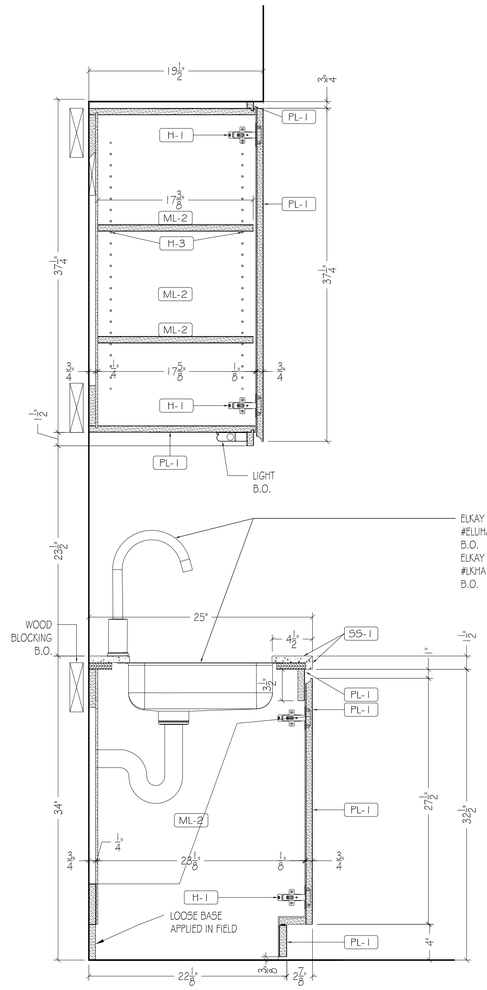

7 VERTICAL SECTION
SCALE: 1-1/2" = 1'-0"
REF: 02/A-08.502

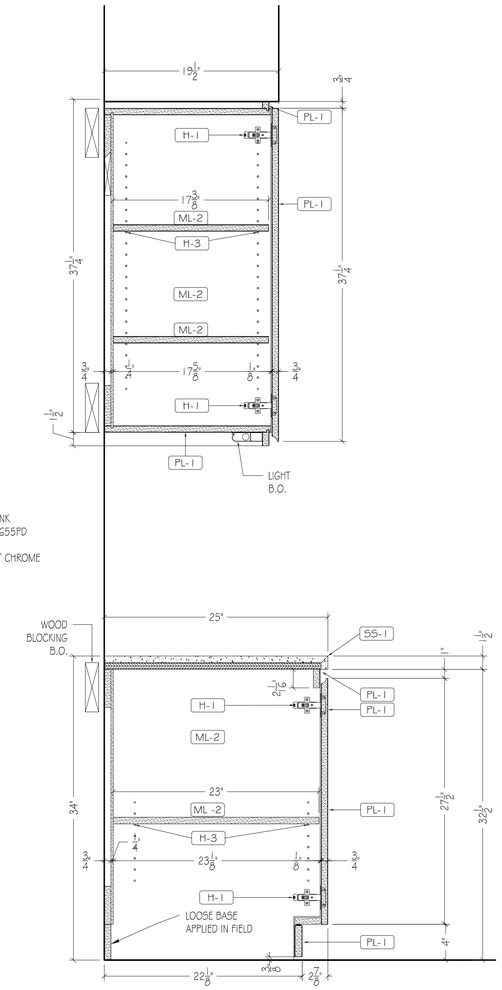

8 VERTICAL SECTION
SCALE: 1-1/2" = 1'-0"
REF: 02/A-08.502

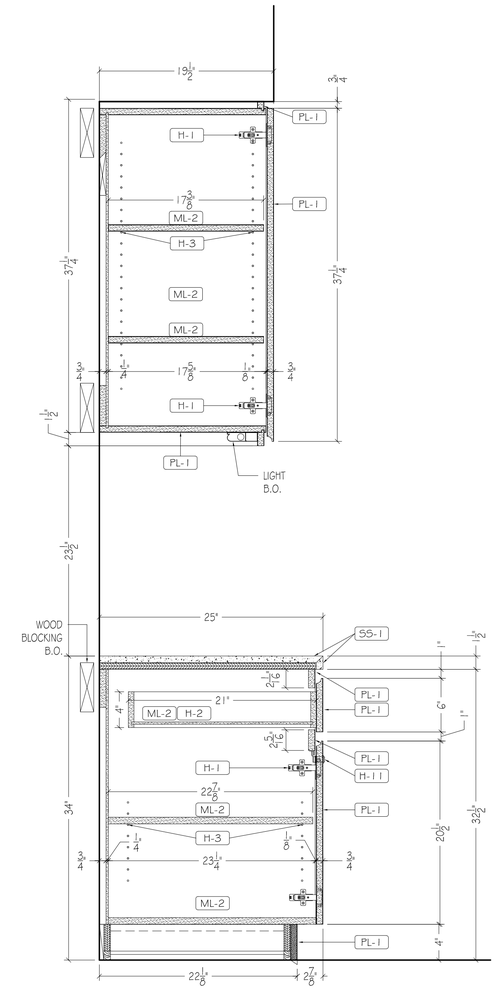

9 VERTICAL SECTION
SCALE: 1-1/2" = 1'-0"
REF: 02/A-08.502

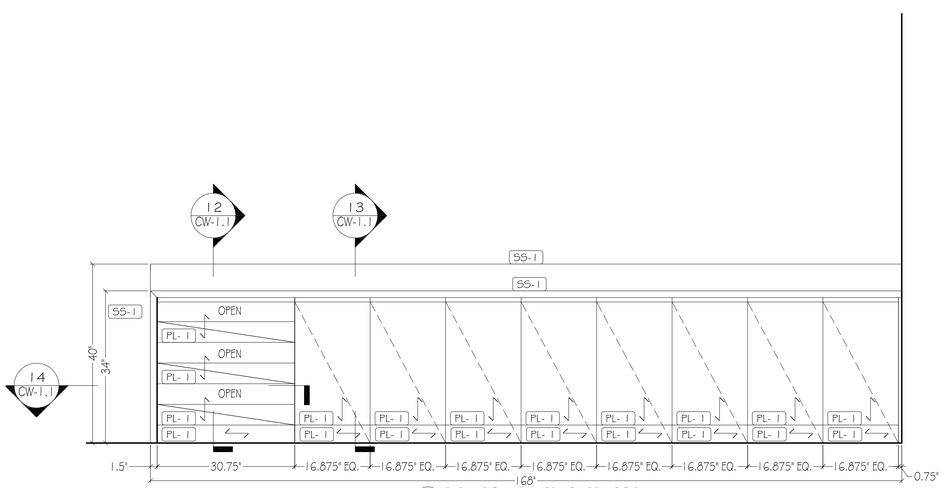

3 ELEVATION: PANTRY/CAFE 4306
SCALE: 3/4" = 1'-0"
REF: 4/A-600.00

4 ELEVATION: PANTRY/CAFE 4306
SCALE: 3/4" = 1'-0"
REF: 3/A-600.00

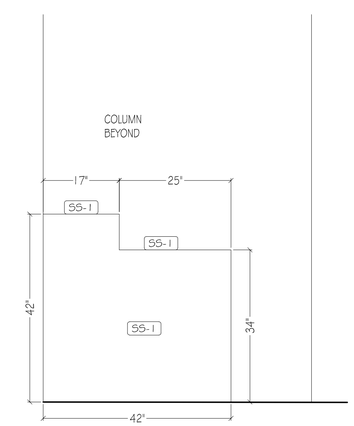

5 ELEVATION: PANTRY/CAFE 4306
SCALE: 3/4" = 1'-0"
REF: NA

PLASTIC LAMINATE

PL-1	ROBIN REIGI #33516 CANYON HOLZFAELLER OAK.
PL-2	PIONITE #F5593 ANGEL WHITE, SUEDE FINISH
PL-3	PIONITE #SE101 BLACK, SUEDE FINISH
PL-4	PIONITE #SG228 SLATE, SUEDE FINISH
PL-5	FORMICA DECOMETAL #M2178-99 BRUSHED STAINLESS STEEL

WOOD, VENEER, MELAMINE

WD-1	ANDERSON PLYWOOD, 3/4" THK. PHENOLIC BIRCH VENEER 13 PLY PLYWOOD, NATURAL FINISH
WD-2	
WD-3	
WD-4	
PF-1	
WB-1	SHOP PRIMED, FINAL PAINT B.O.
ML-1	WHITE MELAMINE
ML-2	BLACK MELAMINE
PRIMB	SHOP PRIMED, FINAL PAINT B.O.

SOLID SURFACE, STONE, METAL GLASS

SS-1	CEASARSTONE #2003 CONCRETE, 3/4" THK. SQUARE EDGE DETAIL BY OTHERS
SS-2	CEASARSTONE #4004 RAW CONCRETE, 3/4" THK. SQUARE EDGE DETAIL BY OTHERS
ST-1	
ST-2	
MT-1	3/4" X 2" X 2" STEEL TUBE, PAINTED BLACK
MT-2	
GL-1	
GL-2	

HARDAWARE

H-1	HINGES: BLUM CLIP TOP 110° CONCEALED HINGES, SELF CLOSING, SOFT CLOSE
H-2	DRAWER SLIDES: RICHELIEU #38322G24, FULL EXTENSION, 24", SOFT CLOSE
H-3	SHELF PINS: RICHELIEU #1235218D, NICKLE FINISH
H-4	CAM LOCK
H-5	Z-CLIP: MONARCH METAL FABRICATION #MF375
H-6	CLOSET ROD: RICHELIEU #122208140, 1 1/4" DIA, CHROME FINISH
H-7	CLOSET ROD FLANGE: RICHELIEU # 8764114140, 1 1/4" DIA. CHROME FINISH
H-8	CENTERLINE STD. GRANITE COUNTERTOP SUPPORT BRACKET 15" LENGTH
H-9	STEEL OUTRIGGER
H-10	1/4" x 1 1/2" X 1 1/2" ALUMINUM ANGLE
H-11	CAM LOCK
H-12	4" BLACK METAL GROMMET
H-13	

MISCELLANEOUS

UP-1	
M-1	
M-2	
M-3	

CONSTRUCTION SPECIFICATIONS

- ☐ LEED
- ☐ FSC
- ☐ GCP
- ☒ A.W.I.- PREMIUM GRADE
- ☐ A.W.I.- CUSTUM GRADE
- ☐ A.W.I.- ECONOMY GRADE

ELEVATOR DIMENSIONS	
HEIGHT	
WIDTH	
DEPTH	
DOOR HEIGHT	
DOOR WIDTH	

☒ PRELIMINARY DRAWING FOR APPROVAL- ALL DIMENSIONS TO BE VERIFIED

☐ FINAL DRAWING- DIMENSION VERIFIED APPROVED FOR CONSTRUCTION

#	DATE	REVISION
8		
7		
6		
5		
4		
3		
2		
1	10-21-17	REVISED PER ARCHITECTURAL RED LINES

DRAWING SET REFERENCE	DRAWINGS DATED:	JOB #: 4180
TITLE	PANTRY/CAFE 4306	
JOB	RAUXA - 43RD & 44TH FLOORS	
LOCATION	225 LIBERTY STREET NEW YORK, NY	
GENERAL CONTRACTOR	HOLT CONSTRUCTION CORPORATION	DWG #: CW-1.1
ARCHITECT	SPECTORGROUP	
FILE: 4-RD-Rauxa-43rd+44th Floors-Wilson - 17.03-17.dwg	BY: DGR MGG	DATE: 9-19-17

ARCH NOTE:
SPECIFIED TRASH CAN WILL NOT FIT IN SPACE. PLEASE ADVISE AS TO NEW SELECTION.

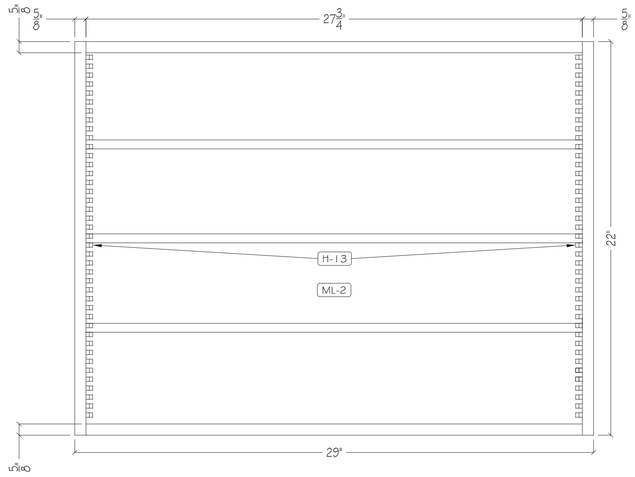

14 PLAN DETAIL: DRAWER
SCALE: 3" = 1'-0"
REF: N/A

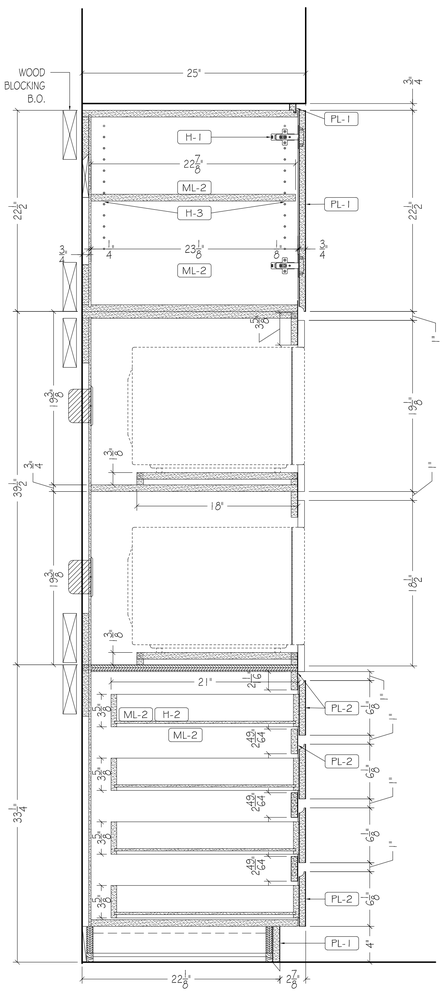

10 VERTICAL SECTION
SCALE: 1-1/2" = 1'-0"
REF: 04/A-08.502

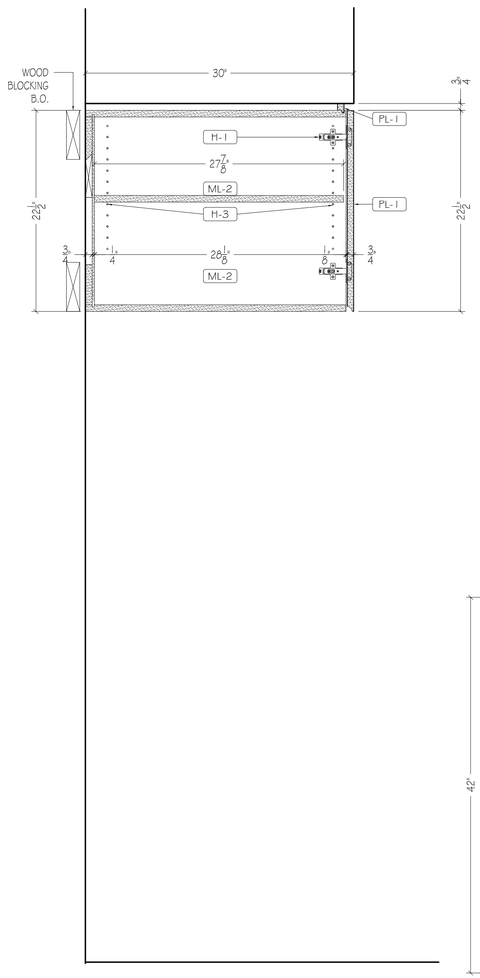

11 VERTICAL SECTION
SCALE: 1-1/2" = 1'-0"
REF: 02/A-08.502

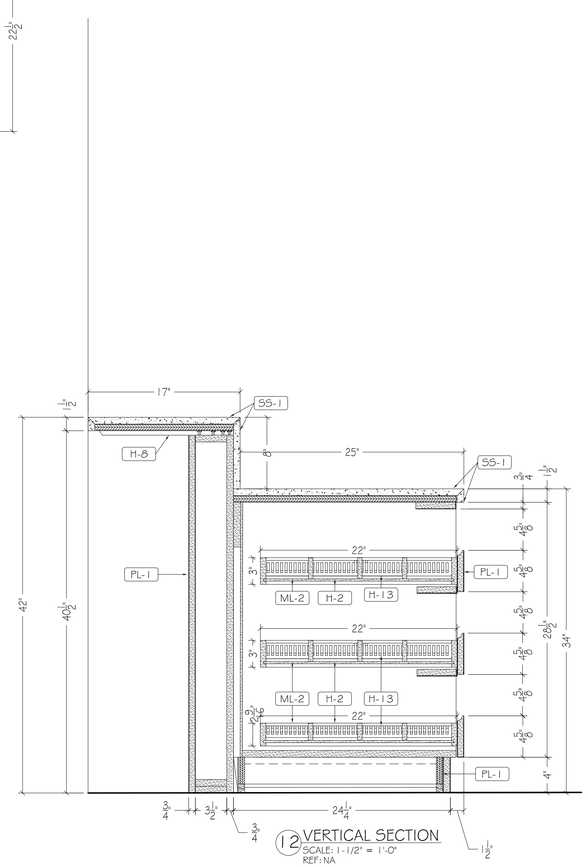

12 VERTICAL SECTION
SCALE: 1-1/2" = 1'-0"
REF: NA

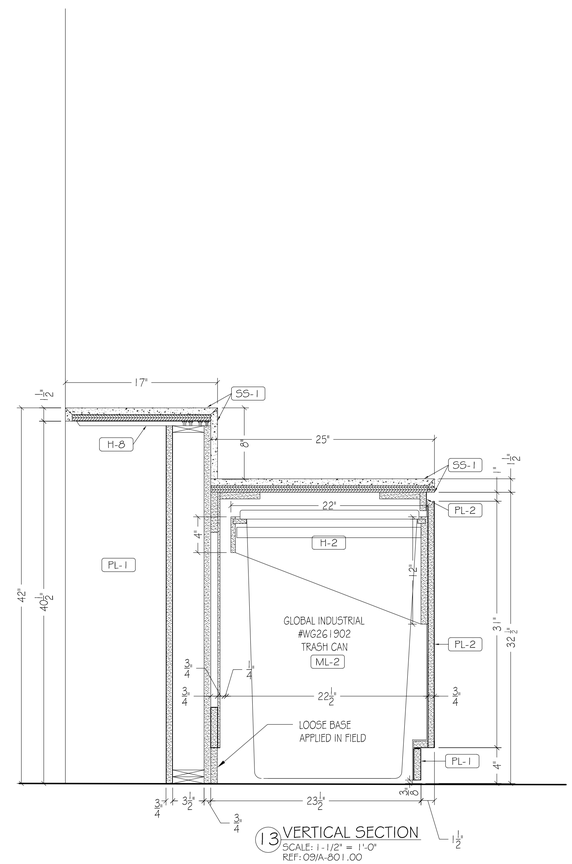

13 VERTICAL SECTION
SCALE: 1-1/2" = 1'-0"
REF: 09/A-801.00

PLASTIC LAMINATE

PL-1	ROBIN REIGI #33516 CANYON HOLZFAELLER OAK
PL-2	PIONITE #F5593 ANGEL WHITE, SUEDE FINISH
PL-3	PIONITE #SE101 BLACK, SUEDE FINISH
PL-4	PIONITE #SG228 SLATE, SUEDE FINISH
PL-5	FORMICA DECOMETAL #M2178-99 BRUSHED STAINLESS STEEL

WOOD, VENEER, MELAMINE

WD-1	ANDERSON PLYWOOD, 3/4" THK. PHENOLIC BIRCH VENEER 13 PLY PLYWOOD, NATURAL FINISH
WD-2	
WD-3	
WD-4	
PF-1	
WB-1	SHOP PRIMED, FINAL PAINT B.O.
ML-1	WHITE MELAMINE
ML-2	BLACK MELAMINE
PRIMB	SHOP PRIMED, FINAL PAINT B.O.

SOLID SURFACE, STONE, METAL GLASS

SS-1	CEASARSTONE #2003 CONCRETE, 3/4" THK. SQUARE EDGE DETAIL BY OTHERS
SS-2	CEASARSTONE #4004 RAW CONCRETE, 3/4" THK. SQUARE EDGE DETAIL BY OTHERS
ST-1	
ST-2	
MT-1	3/4" X 2" X 2' STEEL TUBE, PAINTED BLACK
MT-2	
GL-1	
GL-2	

HARDAWARE

H-1	HINGES: BLUM CLIP TOP 110° CONCEALED HINGES, SELF CLOSING, SOFT CLOSE
H-2	DRAWER SLIDES: RICHELIEU #38322G24, FULL EXTENSION, 24", SOFT CLOSE
H-3	SHELF PINS: RICHELIEU #12352180, NICKLE FINISH
H-4	CAM LOCK
H-5	Z-CLIP: MONARCH METAL FABRICATION #MF375
H-6	CLOSET ROD: RICHELIEU #122208140, 1 1/4" DIA, CHROME FINISH
H-7	CLOSET ROD FLANGE: RICHELIEU # 8764114140, 1 1/4" DIA. CHROME FINISH
H-8	CENTERLINE STD. GRANITE COUNTERTOP SUPPORT BRACKET 15" LENGTH
H-9	STEEL OUTRIGGER
H-10	1/4" x 1 1/2" X 1 1/2" ALUMINUM ANGLE
H-11	CAM LOCK
H-12	4" BLACK METAL GROMMET
H-13	

MISCELLANEOUS

UP-1	
M-1	
M-2	
M-3	

CONSTRUCTION SPECIFICATIONS

- ☐ LEED
- ☐ FSC
- ☐ QCP
- ■ A.W.I.- PREMIUM GRADE
- ☐ A.W.I.- CUSTUM GRADE
- ☐ A.W.I.- ECONOMY GRADE

ELEVATOR DIMENSIONS

HEIGHT	
WIDTH	
DEPTH	
DOOR HEIGHT	
DOOR WIDTH	

■ PRELIMINARY DRAWING FOR APPROVAL- ALL DIMENSIONS TO BE VERIFIED

☐ FINAL DRAWING- DIMENSION VERIFIED APPROVED FOR CONSTRUCTION

#	DATE	REVISION
8		
7		
6		
5		
4		
3		
2		
1	10-21-17	REVISED PER ARCHITECTURAL RED LINES

DRAWING SET REFERENCE	DRAWINGS DATED:	JOB #: 4180
TITLE	PANTRY/CAFE 430G	
JOB	RAUXA - 43RD & 44TH FLOORS	
LOCATION	225 LIBERTY STREET NEW YORK, NY	
GENERAL CONTRACTOR	HOLT CONSTRUCTION CORPORATION	DWG #: CW-1.2
ARCHITECT	SPECTORGROUP	

FILE: 4-RD-Rxa-43rd 44th Tsrs-Wash-10-13-17.dwg BY: D.G.R. M.G. DATE: 9-19-17

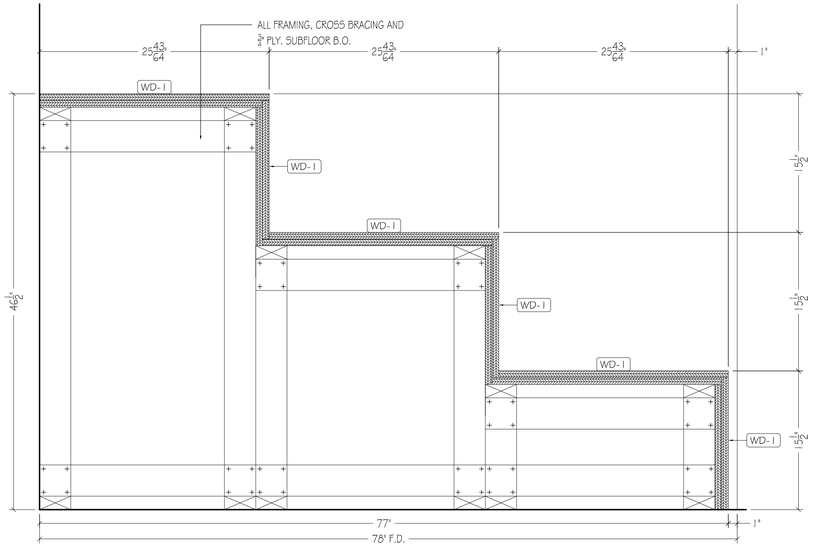

3 VERTICAL SECTION
SCALE: 1-1/2" = 1'-0"
REF: 2/A-802.00

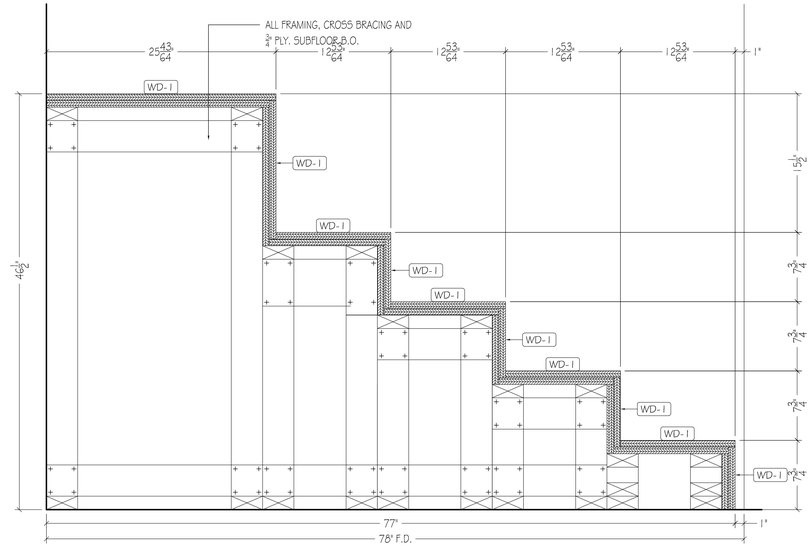

4 VERTICAL SECTION
SCALE: 1-1/2" = 1'-0"
REF: 3/A-802.00

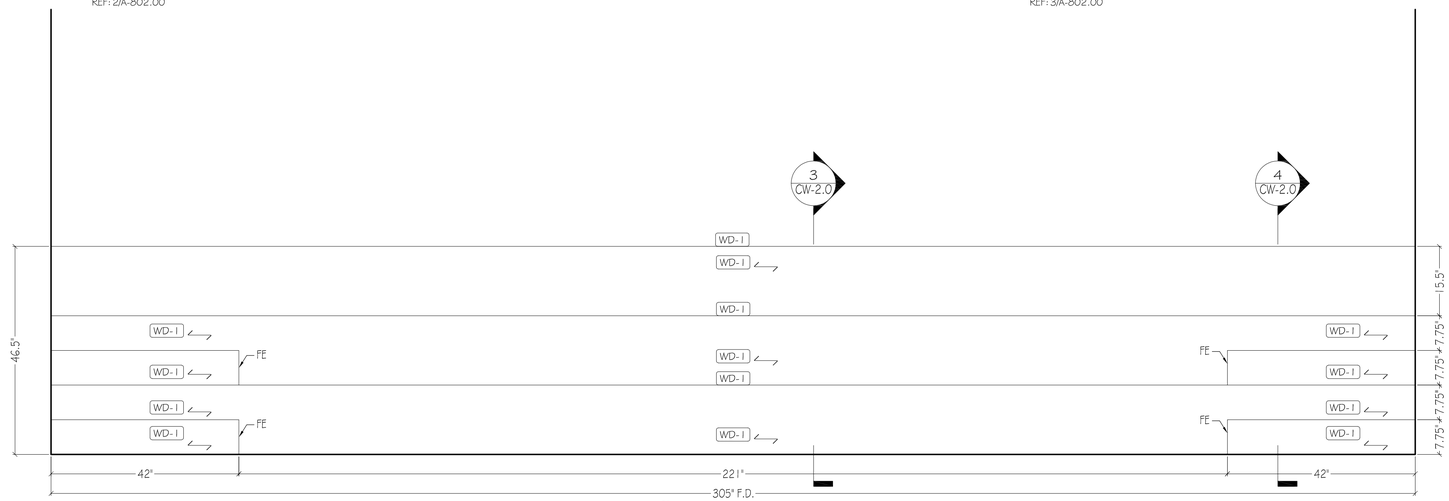

2 ELEVATION: LOUNGE/TOWNHALL 4305
SCALE: 3/4" = 1'-0"
REF: 6/A-600.00

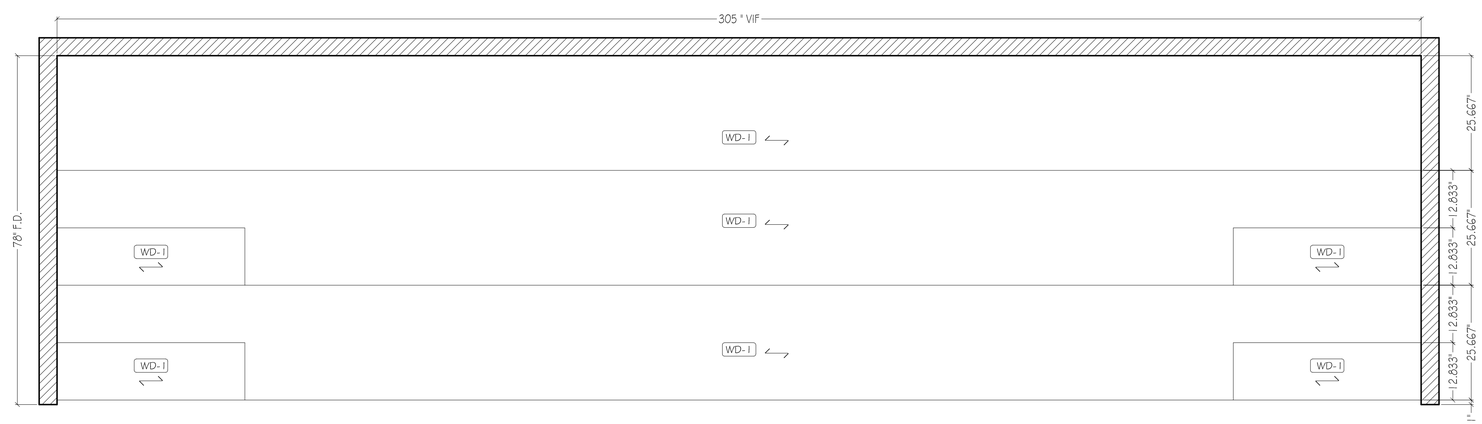

1 PLAN: LOUNGE/TOWNHALL 4305
SCALE: 3/4" = 1'-0"
REF: 1/A201.00

PLASTIC LAMINATE

PL-1	ROBIN REIGI #33516 CANYON HOLZFAELLER OAK
PL-2	PIONITE #F5593 ANGEL WHITE, SUEDE FINISH
PL-3	PIONITE #SE101 BLACK, SUEDE FINISH
PL-4	PIONITE #SG228 SLATE, SUEDE FINISH
PL-5	FORMICA DECOMETAL #M2178-99 BRUSHED STAINLESS STEEL

WOOD, VENEER, MELAMINE

WD-1	ANDERSON PLYWOOD, 3/4" THK. PHENOLIC BIRCH VENEER 13 PLY PLYWOOD, NATURAL FINISH
WD-2	
WD-3	
WD-4	
PF-1	
WB-1	SHOP PRIMED, FINAL PAINT B.O.
ML-1	WHITE MELAMINE
ML-2	BLACK MELAMINE
PRIMB	SHOP PRIMED, FINAL PAINT B.O.

SOLID SURFACE, STONE, METAL GLASS

SS-1	CEASARSTONE #2003 CONCRETE, 3/4" THK. SQUARE EDGE DETAIL BY OTHERS
SS-2	CEASARSTONE #4004 RAW CONCRETE, 3/4" THK. SQUARE EDGE DETAIL BY OTHERS
ST-1	
ST-2	
MT-1	3/4" X 2" X 2" STEEL TUBE, PAINTED BLACK
MT-2	
GL-1	
GL-2	

HARDAWARE

H-1	HINGES: BLUM CLIP TOP 110° CONCEALED HINGES, SELF CLOSING, SOFT CLOSE
H-2	DRAWER SLIDES: RICHELIEU #38322G24, FULL EXTENSION, 24", SOFT CLOSE
H-3	SHELF PINS: RICHELIEU #12352180, NICKLE FINISH
H-4	CAM LOCK
H-5	Z-CLIP: MONARCH METAL FABRICATION #MF375
H-6	CLOSET ROD: RICHELIEU #12220B140, 1 1/4" DIA, CHROME FINISH
H-7	CLOSET ROD FLANGE: RICHELIEU # 8764114140, 1 1/4" DIA. CHROME FINISH
H-8	CENTERLINE STD. GRANITE COUNTERTOP SUPPORT BRACKET 15" LENGTH
H-9	STEEL OUTRIGGER
H-10	1/4" x 1 1/2" X 1 1/2" ALUMINUM ANGLE
H-11	CAM LOCK
H-12	4" BLACK METAL GROMMET
H-13	

MISCELLANEOUS

UP-1	
M-1	
M-2	
M-3	

CONSTRUCTION SPECIFICATIONS

- ☐ LEED
- ☐ FSC
- ☐ GCP
- ☒ A.W.I.- PREMIUM GRADE
- ☐ A.W.I.- CUSTUM GRADE
- ☐ A.W.I.- ECONOMY GRADE

ELEVATOR DIMENSIONS	
HEIGHT	
WIDTH	
DEPTH	
DOOR HEIGHT	
DOOR WIDTH	

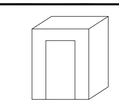

☒ PRELIMINARY DRAWING FOR APPROVAL- ALL DIMENSIONS TO BE VERIFIED

☐ FINAL DRAWING- DIMENSION VERIFIED APPROVED FOR CONSTRUCTION

#	DATE	REVISION
8		
7		
6		
5		
4		
3		
2		
1	10-21-17	REVISED PER ARCHITECTURAL RED LINES

DRAWING SET REFERENCE	DRAWINGS DATED:	JOB #: 4180
TITLE	LOUNGE/TOWNHALL 4305	
JOB	RAUXA - 43RD & 44TH FLOORS	
LOCATION	225 LIBERTY STREET NEW YORK, NY	
GENERAL CONTRACTOR	HOLT CONSTRUCTION CORPORATION	DWG #: CW-2.0
ARCHITECT	SPECTORGROUP	
FILE: 4-RD-Rauxa-43rd-44th Floors-Mission - 17.03.17.dwg	BY: D.G.R. M.G.	DATE: 9-19-17

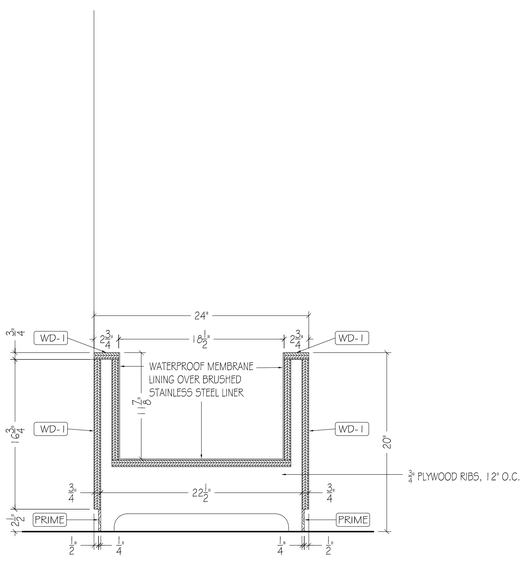

5 VERTICAL SECTION
SCALE: 1-1/2" = 1'-0"
REF: 5/A-802.00

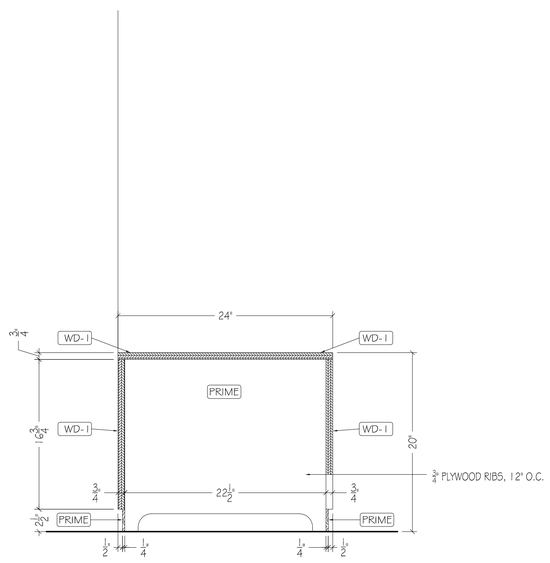

6 VERTICAL SECTION
SCALE: 1-1/2" = 1'-0"
REF: 6/A-802.00

8 ELEVATION: LOUNGE/TOWNHALL 4305
SCALE: 3/4" = 1'-0"
REF: 4/A802.00

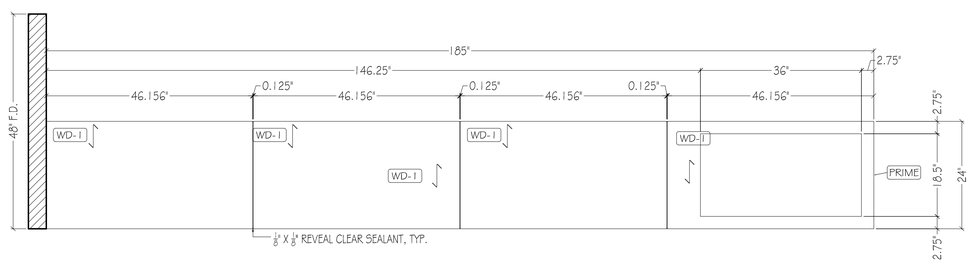

7 PLAN: LOUNGE/TOWNHALL 4305
SCALE: 3/4" = 1'-0"
REF: 1/A201.00

PLASTIC LAMINATE

PL-1	ROBIN REIGI #33516 CANYON HOLZFAELLER OAK.
PL-2	PIONITE #F5593 ANGEL WHITE, SUEDE FINISH
PL-3	PIONITE #SE101 BLACK, SUEDE FINISH
PL-4	PIONITE #SG228 SLATE, SUEDE FINISH
PL-5	FORMICA DECOMETAL #M2178-99 BRUSHED STAINLESS STEEL

WOOD, VENEER, MELAMINE

WD-1	ANDERSON PLYWOOD, 3/4" THK. PHENOLIC BIRCH VENEER 13 PLY PLYWOOD, NATURAL FINISH
WD-2	
WD-3	
WD-4	
PF-1	
WB-1	SHOP PRIMED, FINAL PAINT B.O.
ML-1	WHITE MELAMINE
ML-2	BLACK MELAMINE
PRIME	SHOP PRIMED, FINAL PAINT B.O.

SOLID SURFACE, STONE, METAL GLASS

SS-1	CEASARSTONE #2003 CONCRETE, 3/4" THK. SQUARE EDGE DETAIL BY OTHERS
SS-2	CEASARSTONE #4004 RAW CONCRETE, 3/4" THK. SQUARE EDGE DETAIL BY OTHERS
ST-1	
ST-2	
MT-1	3/4" X 2" X 2" STEEL TUBE, PAINTED BLACK
MT-2	
GL-1	
GL-2	

HARDAWARE

H-1	HINGES: BLUM CLIP TOP 110° CONCEALED HINGES, SELF CLOSING, SOFT CLOSE
H-2	DRAWER SLIDES: RICHELIEU #38322G24, FULL EXTENSION, 24", SOFT CLOSE
H-3	SHELF PINS: RICHELIEU #12352180, NICKLE FINISH
H-4	CAM LOCK
H-5	Z-CLIP: MONARCH METAL FABRICATION #MF375
H-6	CLOSET ROD: RICHELIEU #12220B140, 1 1/4" DIA, CHROME FINISH
H-7	CLOSET ROD FLANGE: RICHELIEU # 8764114140, 1 1/4" DIA. CHROME FINISH
H-8	CENTERLINE STD. GRANITE COUNTERTOP SUPPORT BRACKET 15" LENGTH
H-9	STEEL OUTRIGGER
H-10	3/8" x 1 1/2" X 1 1/2" ALUMINUM ANGLE
H-11	CAM LOCK
H-12	4" BLACK METAL GROMMET
H-13	

MISCELLANEOUS

UP-1	
M-1	
M-2	
M-3	

CONSTRUCTION SPECIFICATIONS

- ☐ LEED
- ☐ FSC
- ☐ QCP
- ☒ A.W.I.- PREMIUM GRADE
- ☐ A.W.I.- CUSTUM GRADE
- ☐ A.W.I.- ECONOMY GRADE

ELEVATOR DIMENSIONS

HEIGHT	
WIDTH	
DEPTH	
DOOR HEIGHT	
DOOR WIDTH	

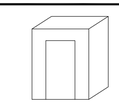

☒ PRELIMINARY DRAWING FOR APPROVAL- ALL DIMENSIONS TO BE VERIFIED

☐ FINAL DRAWING- DIMENSION VERIFIED APPROVED FOR CONSTRUCTION

#	DATE	REVISION
8		
7		
6		
5		
4		
3		
2		
1	10-21-17	REVISED PER ARCHITECTURAL RED LINES

DRAWING SET REFERENCE	DRAWINGS DATED:	JOB #: 4180
TITLE	LOUNGE/TOWNHALL 4305	
JOB	RAUXA - 43RD & 44TH FLOORS	
LOCATION	225 LIBERTY STREET NEW YORK, NY	
GENERAL CONTRACTOR	HOLT CONSTRUCTION CORPORATION	DWG #: CW-2.1
ARCHITECT	SPECTORGROUP	

FILE: 4-30-Rxxx-Ch14-Wd-Trim-Mmwh-10-20-17.dwg BY: D.G.R. M.G. DATE: 9-19-17

1 VERTICAL SECTION
SCALE: 1-1/2" = 1'-0"
REF: 04/A08.502

2 VERTICAL SECTION
SCALE: 1-1/2" = 1'-0"
REF: 04/A08.502

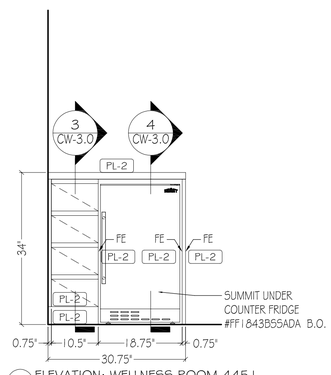

3 ELEVATION: WELLNESS ROOM 445 1
SCALE: 3/4" = 1'-0"
REF: 19/A-602.00

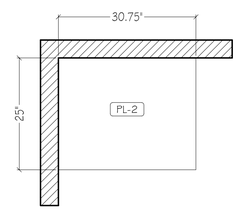

4 PLAN: WELLNESS ROOM 445 1
SCALE: 3/4" = 1'-0"
REF: 1/A202.00

PLASTIC LAMINATE

PL-1	ROBIN REIGI #33516 CANYON HOLZFAELLER OAK.
PL-2	PIONITE #F5593 ANGEL WHITE, SUEDE FINISH
PL-3	PIONITE #SE101 BLACK, SUEDE FINISH
PL-4	PIONITE #SG228 SLATE, SUEDE FINISH
PL-5	FORMICA DECOMETAL #M2178-99 BRUSHED STAINLESS STEEL

WOOD, VENEER, MELAMINE

WD-1	ANDERSON PLYWOOD, 3/4" THK. PHENOLIC BIRCH VENEER 13 PLY PLYWOOD, NATURAL FINISH
WD-2	
WD-3	
WD-4	
PF-1	
WB-1	SHOP PRIMED, FINAL PAINT B.O.
ML-1	WHITE MELAMINE
ML-2	BLACK MELAMINE
PRIMB	SHOP PRIMED, FINAL PAINT B.O.

SOLID SURFACE, STONE, METAL GLASS

SS-1	CEASARSTONE #2003 CONCRETE, 3/4" THK. SQUARE EDGE DETAIL BY OTHERS
SS-2	CEASARSTONE #4004 RAW CONCRETE, 3/4" THK. SQUARE EDGE DETAIL BY OTHERS
ST-1	
ST-2	
MT-1	3/4" X 2" X 2" STEEL TUBE, PAINTED BLACK
MT-2	
GL-1	
GL-2	

HARDAWARE

H-1	HINGES: BLUM CLIP TOP 110° CONCEALED HINGES, SELF CLOSING, SOFT CLOSE
H-2	DRAWER SLIDES: RICHELIEU #38322G24, FULL EXTENSION, 24", SOFT CLOSE
H-3	SHELF PINS: RICHELIEU #12352180, NICKLE FINISH
H-4	CAM LOCK
H-5	Z-CLIP: MONARCH METAL FABRICATION #MF375
H-6	CLOSET ROD: RICHELIEU #12220B140, 1 1/4" DIA, CHROME FINISH
H-7	CLOSET ROD FLANGE: RICHELIEU # 8764114140, 1 1/4" DIA. CHROME FINISH
H-8	CENTERLINE STD. GRANITE COUNTERTOP SUPPORT BRACKET 15" LENGTH
H-9	STEEL OUTRIGGER
H-10	3/8" x 1 1/2" X 1 1/2" ALUMINUM ANGLE
H-11	CAM LOCK
H-12	4" BLACK METAL GROMMET
H-13	

MISCELLANEOUS

UP-1	
M-1	
M-2	
M-3	

CONSTRUCTION SPECIFICATIONS

- ☐ LEED
- ☐ FSC
- ☐ QCP
- ☒ A.W.I.- PREMIUM GRADE
- ☐ A.W.I.- CUSTUM GRADE
- ☐ A.W.I.- ECONOMY GRADE

ELEVATOR DIMENSIONS	
HEIGHT	
WIDTH	
DEPTH	
DOOR HEIGHT	
DOOR WIDTH	

☒ PRELIMINARY DRAWING FOR APPROVAL- ALL DIMENSIONS TO BE VERIFIED

☐ FINAL DRAWING- DIMENSION VERIFIED APPROVED FOR CONSTRUCTION

#	DATE	REVISION
8		
7		
6		
5		
4		
3		
2		
1	10-21-17	REVISED PER ARCHITECTURAL RED LINES

DRAWING SET REFERENCE	DRAWINGS DATED:	JOB #: 4180
TITLE	WELLNESS ROOM 445 1	
JOB	RAUXA - 43RD & 44TH FLOORS	
LOCATION	225 LIBERTY STREET NEW YORK, NY	
GENERAL CONTRACTOR	HOLT CONSTRUCTION CORPORATION	DWG #: CW-3.0
ARCHITECT	SPECTORGROUP	
FILE: 4-30-Rauxa-0-Grid-Wall-Tops-Wheels-10-20-17.dwg	BY: D.G.R. M.G.	DATE: 9-19-17

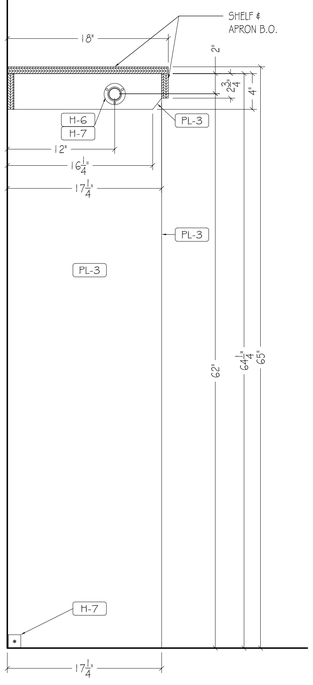

1 SECTION: COAT CLOSET
SCALE: 1-1/2" = 1'-0"
REF: 3/A-801.00

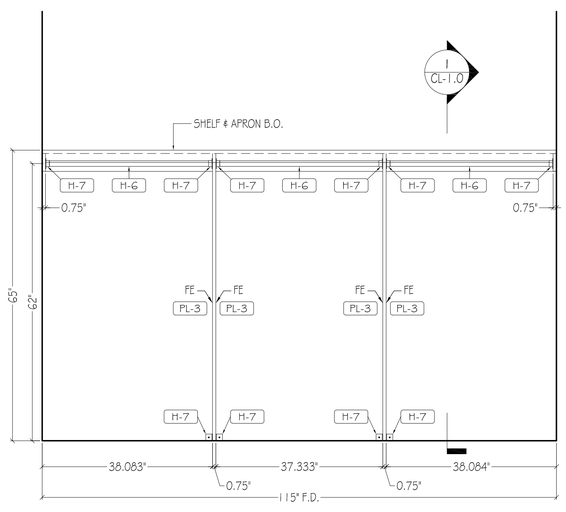

2 ELEVATION: COAT CLOSET 4312
SCALE: 3/4" = 1'-0"

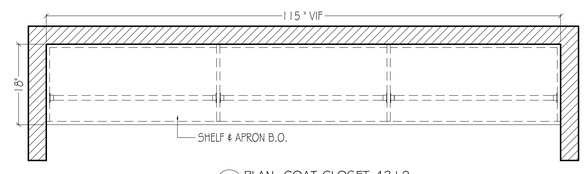

3 PLAN: COAT CLOSET 4312
SCALE: 3/4" = 1'-0"
REF: 1/A201.00

PLASTIC LAMINATE

PL-1	ROBIN REIGI #33516 CANYON HOLZTAELLER OAK
PL-2	PIONITE #F5593 ANGEL WHITE, SUEDE FINISH
PL-3	PIONITE #SE101 BLACK, SUEDE FINISH
PL-4	PIONITE #SG228 SLATE, SUEDE FINISH
PL-5	FORMICA DECOMETAL #M2178-99 BRUSHED STAINLESS STEEL

WOOD, VENEER, MELAMINE

WD-1	ANDERSON PLYWOOD, 3/4" THK. PHENOLIC BIRCH VENEER 13 PLY PLYWOOD, NATURAL FINISH
WD-2	
WD-3	
WD-4	
PF-1	
WB-1	SHOP PRIMED, FINAL PAINT B.O.
ML-1	WHITE MELAMINE
ML-2	BLACK MELAMINE
PRIME	SHOP PRIMED, FINAL PAINT B.O.

SOLID SURFACE, STONE, METAL GLASS

SS-1	CEASARSTONE #2003 CONCRETE, 3/4" THK. SQUARE EDGE DETAIL BY OTHERS
SS-2	CEASARSTONE #4004 RAW CONCRETE, 3/4" THK. SQUARE EDGE DETAIL BY OTHERS
ST-1	
ST-2	
MT-1	3/4" X 2" X 2" STEEL TUBE, PAINTED BLACK
MT-2	
GL-1	
GL-2	

HARDWARE

H-1	HINGES: BLUM CLIP TOP 110° CONCEALED HINGES, SELF CLOSING, SOFT CLOSE
H-2	DRAWER SLIDES:- RICHELIEU #38322224, FULL EXTENSION, 24", SOFT CLOSE
H-3	SHELF PINS: RICHELIEU #123521BO, NICKLE FINISH
H-4	CAM LOCK
H-5	Z-CLIP: MONARCH METAL FABRICATION #MF375
H-6	CLOSET ROD: RICHELIEU #122208140, 1 1/2" DIA, CHROME FINISH
H-7	CLOSET ROD FLANGE: RICHELIEU # 8764114140, 1 1/2" DIA. CHROME FINISH
H-8	CENTERLINE STD. GRANITE COUNTERTOP SUPPORT BRACKET 15" LENGTH
H-9	STEEL OUTRIGGER
H-10	3/8" x 1 1/2" X 1 1/2" ALUMINUM ANGLE
H-11	CAM LOCK
H-12	4" BLACK METAL GROMMET
H-13	

MISCELLANEOUS

UP-1	
M-1	
M-2	
M-3	

CONSTRUCTION SPECIFICATIONS

- ☐ LEED
- ☐ FSC
- ☐ QCP
- ■ A.W.I.- PREMIUM GRADE
- ☐ A.W.I.- CUSTUM GRADE
- ☐ A.W.I.- ECONOMY GRADE

ELEVATOR DIMENSIONS

HEIGHT	
WIDTH	
DEPTH	
DOOR HEIGHT	
DOOR WIDTH	

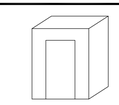

■ PRELIMINARY DRAWING FOR APPROVAL- ALL DIMENSIONS TO BE VERIFIED

☐ FINAL DRAWING- DIMENSION VERIFIED APPROVED FOR CONSTRUCTION

#	DATE	REVISION
8		
7		
6		
5		
4		
3		
2		
1	10-21-17	REVISED PER ARCHITECTURAL RED LINES

DRAWING SET REFERENCE	DRAWINGS DATED:	JOB #: 4180
TITLE	COAT CLOSET 4312	
JOB	RAUXA - 43RD & 44TH FLOORS	
LOCATION	225 LIBERTY STREET NEW YORK, NY	
GENERAL CONTRACTOR	HOLT CONSTRUCTION CORPORATION	DWG #: CL-1.0
ARCHITECT	SPECTORGROUP	
FILE: 4-RS-Base-Std-4th Floor-Wash 10-03-17.dwg	BY: D.G.R. M.G.	DATE: 9-19-17

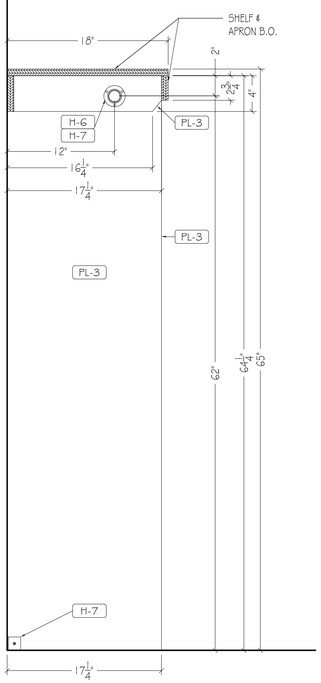

1 SECTION: COAT CLOSET
SCALE: 1-1/2" = 1'-0"
REF: 3/A-801.00

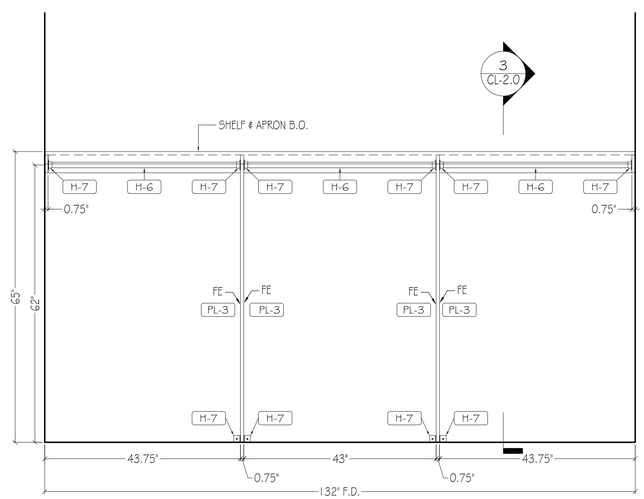

2 ELEVATION: COAT CLOSET 4407
SCALE: 3/4" = 1'-0"

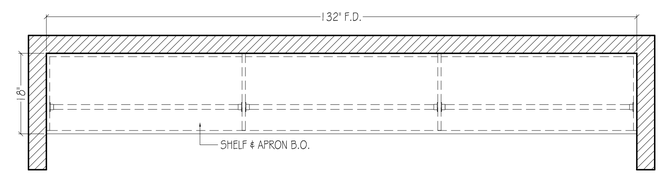

3 PLAN: COAT CLOSET 4407
SCALE: 3/4" = 1'-0"
REF: 1/A201.00

PLASTIC LAMINATE

PL-1	ROBIN REIGI #33516 CANYON HOLZTAELLER OAK
PL-2	PIONITE #F5593 ANGEL WHITE, SUEDE FINISH
PL-3	PIONITE #SE101 BLACK, SUEDE FINISH
PL-4	PIONITE #SG228 SLATE, SUEDE FINISH
PL-5	FORMICA DECOMETAL #M2178-99 BRUSHED STAINLESS STEEL

WOOD, VENEER, MELAMINE

WD-1	ANDERSON PLYWOOD, 3/4" THK. PHENOLIC BIRCH VENEER 13 PLY PLYWOOD, NATURAL FINISH
WD-2	
WD-3	
WD-4	
PF-1	
WB-1	SHOP PRIMED, FINAL PAINT B.O.
ML-1	WHITE MELAMINE
ML-2	BLACK MELAMINE
PRIMB	SHOP PRIMED, FINAL PAINT B.O.

SOLID SURFACE, STONE, METAL GLASS

SS-1	CEASARSTONE #2003 CONCRETE, 3/4" THK. SQUARE EDGE DETAIL BY OTHERS
SS-2	CEASARSTONE #4004 RAW CONCRETE, 3/4" THK. SQUARE EDGE DETAIL BY OTHERS
ST-1	
ST-2	
MT-1	3/4" X 2" X 2" STEEL TUBE, PAINTED BLACK
MT-2	
GL-1	
GL-2	

HARDAWARE

H-1	HINGES: BLUM CLIP TOP 110° CONCEALED HINGES, SELF CLOSING, SOFT CLOSE
H-2	DRAWER SLIDES: RICHELIEU #38322224, FULL EXTENSION, 24", SOFT CLOSE
H-3	SHELF PINS: RICHELIEU #12352180, NICKLE FINISH
H-4	CAM LOCK
H-5	Z-CLIP: MONARCH METAL FABRICATION #MF375
H-6	CLOSET ROD: RICHELIEU #12220B140, 1 1/2" DIA, CHROME FINISH
H-7	CLOSET ROD FLANGE: RICHELIEU # 8764114140, 1 1/2" DIA. CHROME FINISH
H-8	CENTERLINE STD. GRANITE COUNTERTOP SUPPORT BRACKET 15" LENGTH
H-9	STEEL OUTRIGGER
H-10	3/8" x 1 1/2" X 1 1/2" ALUMINUM ANGLE
H-11	CAM LOCK
H-12	4" BLACK METAL GROMMET
H-13	

MISCELLANEOUS

UP-1	
M-1	
M-2	
M-3	

CONSTRUCTION SPECIFICATIONS

- ☐ LEED
- ☐ FSC
- ☐ QCP
- ☒ A.W.I.- PREMIUM GRADE
- ☐ A.W.I.- CUSTUM GRADE
- ☐ A.W.I.- ECONOMY GRADE

ELEVATOR DIMENSIONS	
HEIGHT	
WIDTH	
DEPTH	
DOOR HEIGHT	
DOOR WIDTH	

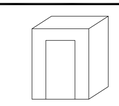

☒ PRELIMINARY DRAWING FOR APPROVAL- ALL DIMENSIONS TO BE VERIFIED

☐ FINAL DRAWING- DIMENSION VERIFIED APPROVED FOR CONSTRUCTION

#	DATE	REVISION
8		
7		
6		
5		
4		
3		
2		
1	10-21-17	REVISED PER ARCHITECTURAL RED LINES

DRAWING SET REFERENCE	DRAWINGS DATED:	JOB #: 4180
TITLE	COAT CLOSET 4407	
JOB	RAUXA - 43RD & 44TH FLOORS	
LOCATION	225 LIBERTY STREET NEW YORK, NY	
GENERAL CONTRACTOR	HOLT CONSTRUCTION CORPORATION	DWG #: CL-2.0
ARCHITECT	SPECTORGROUP	
FILE: 4-30-Rax-Grd 4th Flrs-Wash-10-20-17.dwg	BY: D.G.R. M.G.	DATE: 9-19-17

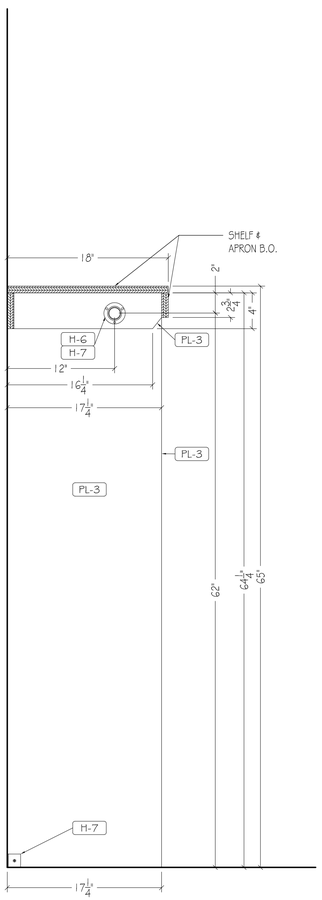

1 SECTION: COAT CLOSET
SCALE: 1-1/2" = 1'-0"
REF: 3/A-801.00

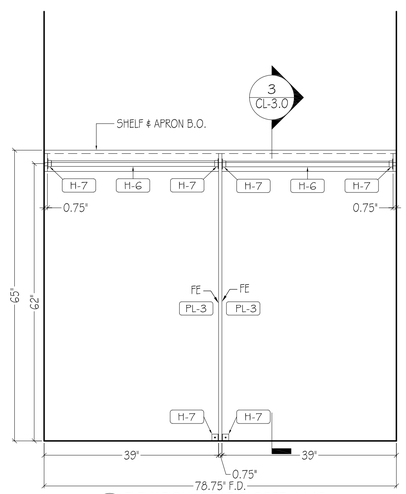

2 ELEVATION: COAT CLOSET 4443
SCALE: 3/4" = 1'-0"
REF: NA

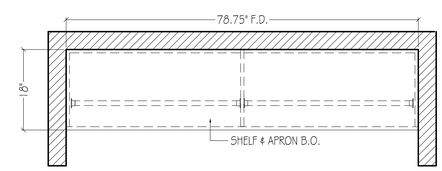

3 PLAN: COAT CLOSET 4443
SCALE: 3/4" = 1'-0"
REF: 1/A201.00

PLASTIC LAMINATE

PL-1	ROBIN REIGI #33516 CANYON HOLZFAELLER OAK.
PL-2	PIONITE #F5593 ANGEL WHITE, SUEDE FINISH
PL-3	PIONITE #SE101 BLACK, SUEDE FINISH
PL-4	PIONITE #SG228 SLATE, SUEDE FINISH
PL-5	FORMICA DECOMETAL #M2178-99 BRUSHED STAINLESS STEEL

WOOD, VENEER, MELAMINE

WD-1	ANDERSON PLYWOOD, 3/4" THK. PHENOLIC BIRCH VENEER 13 PLY PLYWOOD, NATURAL FINISH
WD-2	
WD-3	
WD-4	
PF-1	
WB-1	SHOP PRIMED, FINAL PAINT B.O.
ML-1	WHITE MELAMINE
ML-2	BLACK MELAMINE
PRIMB	SHOP PRIMED, FINAL PAINT B.O.

SOLID SURFACE, STONE, METAL GLASS

SS-1	CEASARSTONE #2003 CONCRETE, 3/4" THK. SQUARE EDGE DETAIL BY OTHERS
SS-2	CEASARSTONE #4004 RAW CONCRETE, 3/4" THK. SQUARE EDGE DETAIL BY OTHERS
ST-1	
ST-2	
MT-1	3/4" X 2" X 2" STEEL TUBE, PAINTED BLACK
MT-2	
GL-1	
GL-2	

HARDAWARE

H-1	HINGES: BLUM CLIP TOP 110° CONCEALED HINGES, SELF CLOSING, SOFT CLOSE
H-2	DRAWER SLIDES: RICHELIEU #38322G24, FULL EXTENSION, 24", SOFT CLOSE
H-3	SHELF PINS: RICHELIEU #12352180, NICKLE FINISH
H-4	CAM LOCK
H-5	Z-CLIP: MONARCH METAL FABRICATION #MF375
H-6	CLOSET ROD: RICHELIEU #12220B140, 1 1/4" DIA, CHROME FINISH
H-7	CLOSET ROD FLANGE: RICHELIEU # 8764114140, 1 1/2" DIA. CHROME FINISH
H-8	CENTERLINE STD. GRANITE COUNTERTOP SUPPORT BRACKET 15" LENGTH
H-9	STEEL OUTRIGGER
H-10	3/8" x 1 1/2" X 1 1/2" ALUMINUM ANGLE
H-11	CAM LOCK
H-12	4" BLACK METAL GROMMET
H-13	

MISCELLANEOUS

UP-1	
M-1	
M-2	
M-3	

CONSTRUCTION SPECIFICATIONS

- ☐ LEED
- ☐ FSC
- ☐ QCP
- ☒ A.W.I.- PREMIUM GRADE
- ☐ A.W.I.- CUSTUM GRADE
- ☐ A.W.I.- ECONOMY GRADE

ELEVATOR DIMENSIONS	
HEIGHT	
WIDTH	
DEPTH	
DOOR HEIGHT	
DOOR WIDTH	

☒ PRELIMINARY DRAWING FOR APPROVAL- ALL DIMENSIONS TO BE VERIFIED

☐ FINAL DRAWING- DIMENSION VERIFIED APPROVED FOR CONSTRUCTION

#	DATE	REVISION
8		
7		
6		
5		
4		
3		
2		
1	10-21-17	REVISED PER ARCHITECTURAL RED LINES

DRAWING SET REFERENCE	DRAWINGS DATED:	JOB #: 4180
TITLE	COAT CLOSET 4443	
JOB	RAUXA - 43RD & 44TH FLOORS	
LOCATION	225 LIBERTY STREET NEW YORK, NY	
GENERAL CONTRACTOR	HOLT CONSTRUCTION CORPORATION	DWG #: CL-3.0
ARCHITECT	SPECTORGROUP	
FILE: 4-80-Rauxa-0-Grid-Mod-Tops-Wmark-10-20-17.dwg	BY: D.G.R. M.G.	DATE: 9-19-17

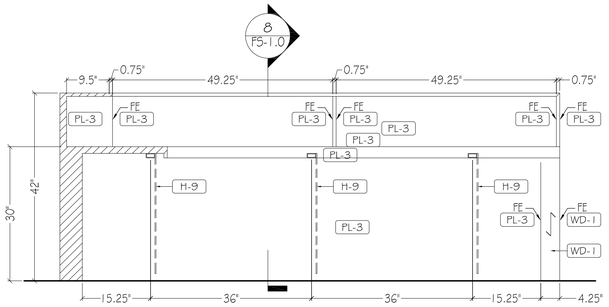

6 ELEVATION: RECEPTION 4301
SCALE: 3/4" = 1'-0"
REF: N/A

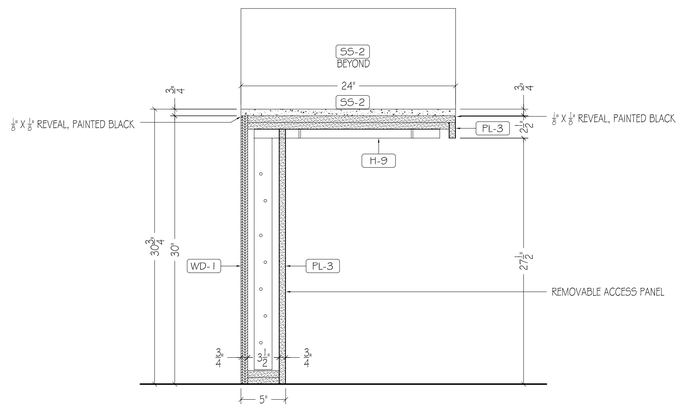

7 VERTICAL SECTION
SCALE: 1-1/2" = 1'-0"
REF: 13/A-802.00

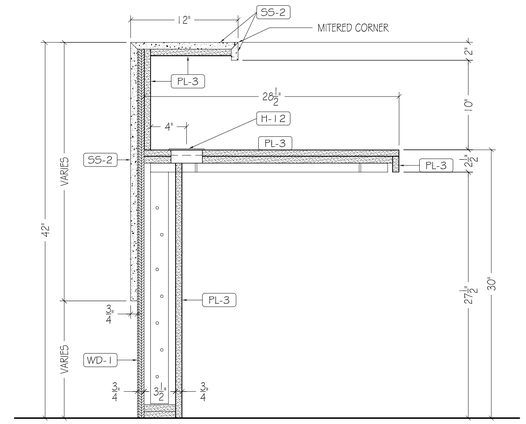

8 VERTICAL SECTION
SCALE: 1-1/2" = 1'-0"
REF: 12/A-802.00

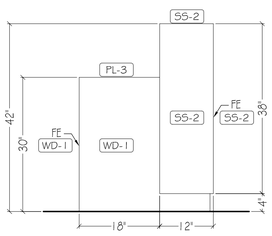

4 ELEVATION: RECEPTION 4301
SCALE: 3/4" = 1'-0"
REF: 10/A-802.00

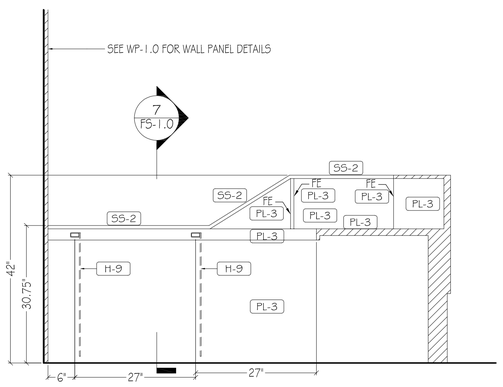

5 ELEVATION: RECEPTION 4301
SCALE: 3/4" = 1'-0"
REF: 10/A-802.00

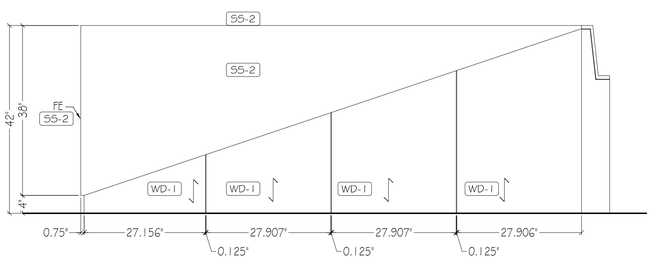

1 ELEVATION: RECEPTION 4301
SCALE: 3/4" = 1'-0"
REF: 8/A-802.00

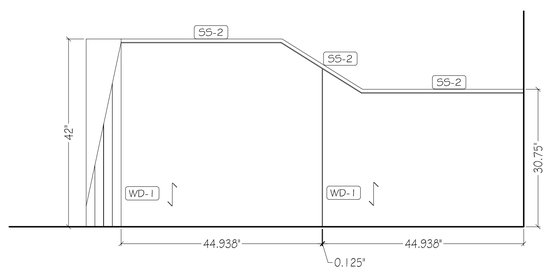

2 ELEVATION: RECEPTION 4301
SCALE: 3/4" = 1'-0"
REF: 9/A-802.00

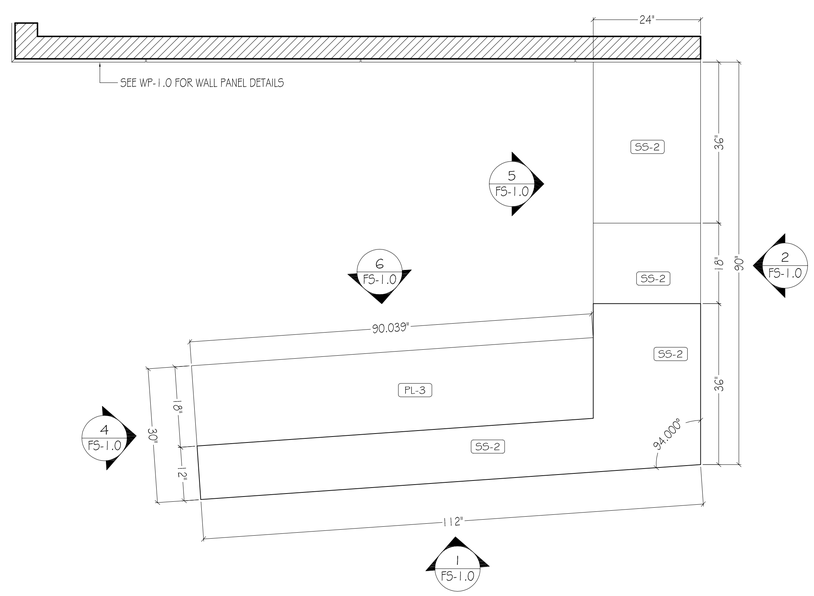

3 PLAN: RECEPTION 4301
SCALE: 3/4" = 1'-0"
REF: 11/A-802.00

PLASTIC LAMINATE

PL-1	ROBIN REIGI #33516 CANYON HOLZFAELLER OAK.
PL-2	PIONITE #F5593 ANGEL WHITE, SUEDE FINISH
PL-3	PIONITE #SE101 BLACK, SUEDE FINISH
PL-4	PIONITE #SG228 SLATE, SUEDE FINISH
PL-5	FORMICA DECOMETAL #M2178-99 BRUSHED STAINLESS STEEL

WOOD, VENEER, MELAMINE

WD-1	ANDERSON PLYWOOD, 3/4" THK. PHENOLIC BIRCH VENEER 13 PLY PLYWOOD, NATURAL FINISH
WD-2	
WD-3	
WD-4	
PF-1	
WB-1	SHOP PRIMED, FINAL PAINT B.O.
ML-1	WHITE MELAMINE
ML-2	BLACK MELAMINE
PRIMB	SHOP PRIMED, FINAL PAINT B.O.

SOLID SURFACE, STONE, METAL GLASS

SS-1	CEASARSTONE #2003 CONCRETE, 3/4" THK. SQUARE EDGE DETAIL BY OTHERS
SS-2	CEASARSTONE #4004 RAW CONCRETE, 3/4" THK. SQUARE EDGE DETAIL BY OTHERS
ST-1	
ST-2	
MT-1	3/4" X 2" X 2" STEEL TUBE, PAINTED BLACK
MT-2	
GL-1	
GL-2	

HARDWARE

H-1	HINGES: BLUM CLIP TOP 110° CONCEALED HINGES, SELF CLOSING, SOFT CLOSE
H-2	DRAWER SLIDES: RICHELIEU #38322G24, FULL EXTENSION, 24", SOFT CLOSE
H-3	SHELF PINS: RICHELIEU #12352180, NICKLE FINISH
H-4	CAM LOCK
H-5	Z-CLIP: MONARCH METAL FABRICATION #MF375
H-6	CLOSET ROD: RICHELIEU #122208140, 1 1/4" DIA, CHROME FINISH
H-7	CLOSET ROD FLANGE: RICHELIEU # 8764114140, 1 1/4" DIA. CHROME FINISH
H-8	CENTERLINE STD. GRANITE COUNTERTOP SUPPORT BRACKET 15" LENGTH
H-9	STEEL OUTRIGGER
H-10	3/8" x 1 1/2" X 1 1/2" ALUMINUM ANGLE
H-11	CAM LOCK
H-12	4" BLACK METAL GROMMET
H-13	

MISCELLANEOUS

UP-1	
M-1	
M-2	
M-3	

CONSTRUCTION SPECIFICATIONS

- ☐ LEED
- ☐ FSC
- ☐ QCP
- ■ A.W.I.- PREMIUM GRADE
- ☐ A.W.I.- CUSTUM GRADE
- ☐ A.W.I.- ECONOMY GRADE

ELEVATOR DIMENSIONS

HEIGHT	
WIDTH	
DEPTH	
DOOR HEIGHT	
DOOR WIDTH	

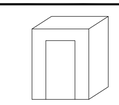

■ PRELIMINARY DRAWING FOR APPROVAL- ALL DIMENSIONS TO BE VERIFIED

☐ FINAL DRAWING- DIMENSION VERIFIED APPROVED FOR CONSTRUCTION

#	DATE	REVISION
8		
7		
6		
5		
4		
3		
2		
1	10-21-17	REVISED PER ARCHITECTURAL RED LINES

DRAWING SET REFERENCE	DRAWINGS DATED:	JOB #: 4180
TITLE	RECEPTION 4301	
JOB	RAUXA - 43RD & 44TH FLOORS	
LOCATION	225 LIBERTY STREET NEW YORK, NY	
GENERAL CONTRACTOR	HOLT CONSTRUCTION CORPORATION	DWG #: FS-1.0
ARCHITECT	SPECTORGROUP	
FILE: 4-30-Rauxa-Grid-Hdr-Tpcs-Wmark-10-20-17.dwg	BY: D.G.R M.G.	DATE: 9-19-17

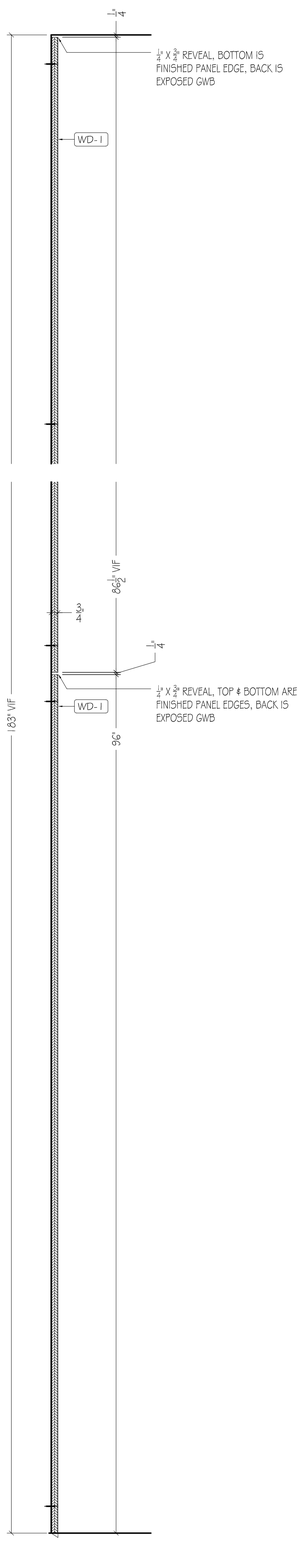

1 VERTICAL SECTION
SCALE: 1-1/2" = 1'-0"
REF: NA

INSTALLATION NOTE:
ALL PANELS TO BE FACE SCREWED TO WALL.

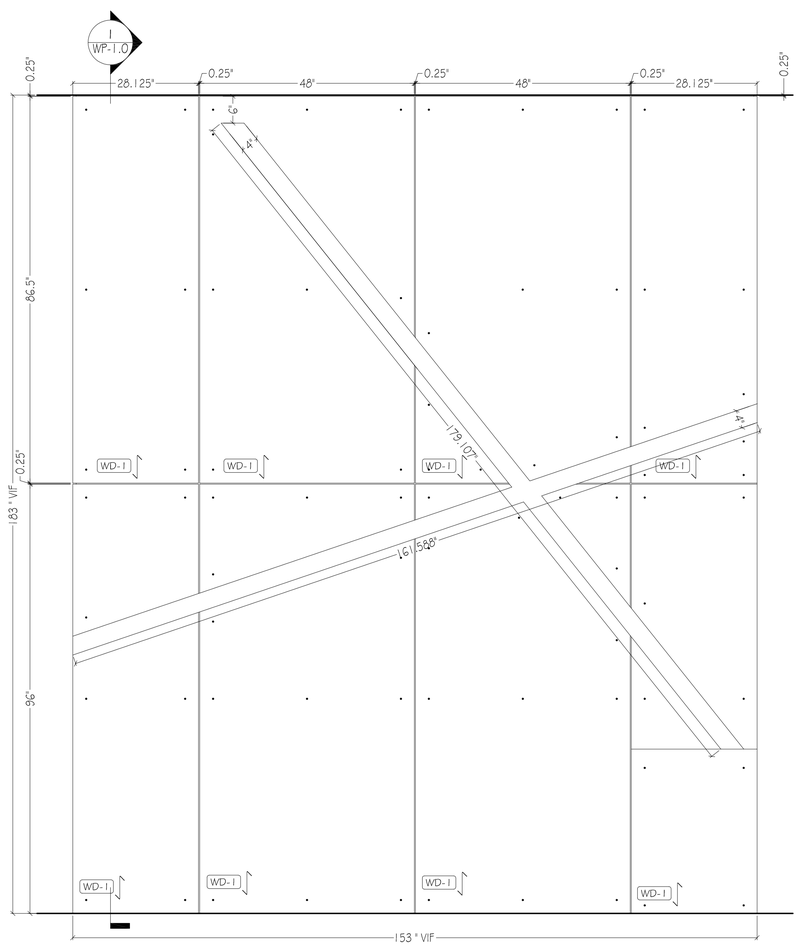

2 ELEVATION: RECEPTION 4301
SCALE: 3/4" = 1'-0"
REF: 10/A-600.00

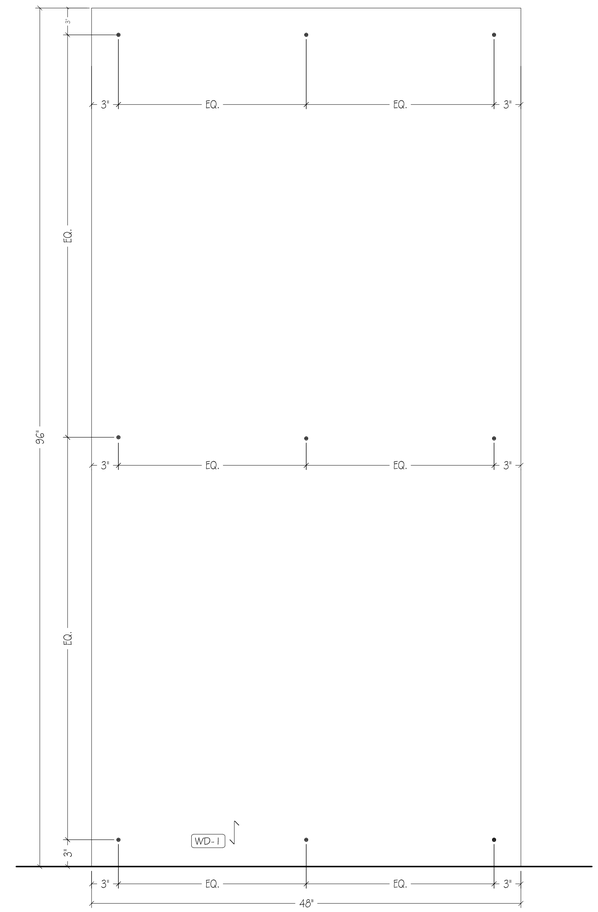

9 ELEVATION: SCREW PATTERN
SCALE: 1 1/2" = 1'-0"
REF: 6/A-701.00

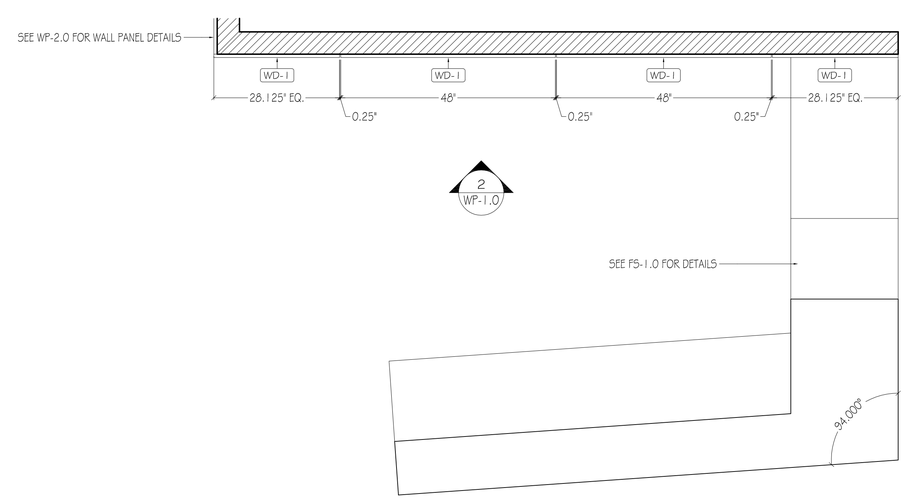

3 PLAN: RECEPTION 4301
SCALE: 3/4" = 1'-0"
REF: 11/A-802.00

PLASTIC LAMINATE

PL-1	ROBIN REIGI #33516 CANYON HOLZFAELLER OAK
PL-2	PIONITE #F5593 ANGEL WHITE, SUEDE FINISH
PL-3	PIONITE #SE101 BLACK, SUEDE FINISH
PL-4	PIONITE #SG228 SLATE, SUEDE FINISH
PL-5	FORMICA DECOMETAL #M2178-99 BRUSHED STAINLESS STEEL

WOOD, VENEER, MELAMINE

WD-1	ANDERSON PLYWOOD, 3/4" THK. PHENOLIC BIRCH VENEER 13 PLY PLYWOOD, NATURAL FINISH
WD-2	
WD-3	
WD-4	
PF-1	
WB-1	SHOP PRIMED, FINAL PAINT B.O.
ML-1	WHITE MELAMINE
ML-2	BLACK MELAMINE
PRIMB	SHOP PRIMED, FINAL PAINT B.O.

SOLID SURFACE, STONE, METAL GLASS

SS-1	CEASARSTONE #2003 CONCRETE, 3/4" THK. SQUARE EDGE DETAIL BY OTHERS
SS-2	CEASARSTONE #4004 RAW CONCRETE, 3/4" THK. SQUARE EDGE DETAIL BY OTHERS
ST-1	
ST-2	
MT-1	3/4" X 2" X 2" STEEL TUBE, PAINTED BLACK
MT-2	
GL-1	
GL-2	

HARDAWARE

H-1	HINGES: BLUM CLIP TOP 110° CONCEALED HINGES, SELF CLOSING, SOFT CLOSE
H-2	DRAWER SLIDES: RICHELIEU #38322G24, FULL EXTENSION, 24", SOFT CLOSE
H-3	SHELF PINS: RICHELIEU #12352180, NICKLE FINISH
H-4	CAM LOCK
H-5	Z-CLIP: MONARCH METAL FABRICATION #MF375
H-6	CLOSET ROD: RICHELIEU #122208140, 1 1/4" DIA, CHROME FINISH
H-7	CLOSET ROD FLANGE: RICHELIEU # 8764114140, 1 1/4" DIA. CHROME FINISH
H-8	CENTERLINE STD. GRANITE COUNTERTOP SUPPORT BRACKET 15" LENGTH
H-9	STEEL OUTRIGGER
H-10	3/8" x 1 1/2" X 1 1/2" ALUMINUM ANGLE
H-11	CAM LOCK
H-12	4" BLACK METAL GROMMET
H-13	

MISCELLANEOUS

UP-1	
M-1	
M-2	
M-3	

CONSTRUCTION SPECIFICATIONS

- ☐ LEED
- ☐ FSC
- ☐ GCP
- ☒ A.W.I.- PREMIUM GRADE
- ☐ A.W.I.- CUSTUM GRADE
- ☐ A.W.I.- ECONOMY GRADE

ELEVATOR DIMENSIONS

HEIGHT	
WIDTH	
DEPTH	
DOOR HEIGHT	
DOOR WIDTH	

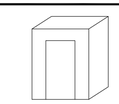

☒ PRELIMINARY DRAWING FOR APPROVAL- ALL DIMENSIONS TO BE VERIFIED

☐ FINAL DRAWING- DIMENSION VERIFIED APPROVED FOR CONSTRUCTION

#	DATE	REVISION
8		
7		
6		
5		
4		
3		
2		
1	10-21-17	REVISED PER ARCHITECTURAL RED LINES

DRAWING SET REFERENCE	DRAWINGS DATED:	JOB #: 4180
TITLE	RECEPTION 4301	
JOB	RAUXA - 43RD & 44TH FLOORS	
LOCATION	225 LIBERTY STREET NEW YORK, NY	
GENERAL CONTRACTOR	HOLT CONSTRUCTION CORPORATION	DWG #: WP-1.0
ARCHITECT	SPECTORGROUP	
FILE: 4180-Rauxa-43rd 44th Floors-Mbach-10.20.17.dwg	BY: D.G.R. M.G.	DATE: 9-19-17

NOTE:
ALL DIMENSIONS TO BE VERIFIED IN FIELD.

INSTALLATION NOTE:
ALL PANELS TO BE FACE SCREWED TO WALL.

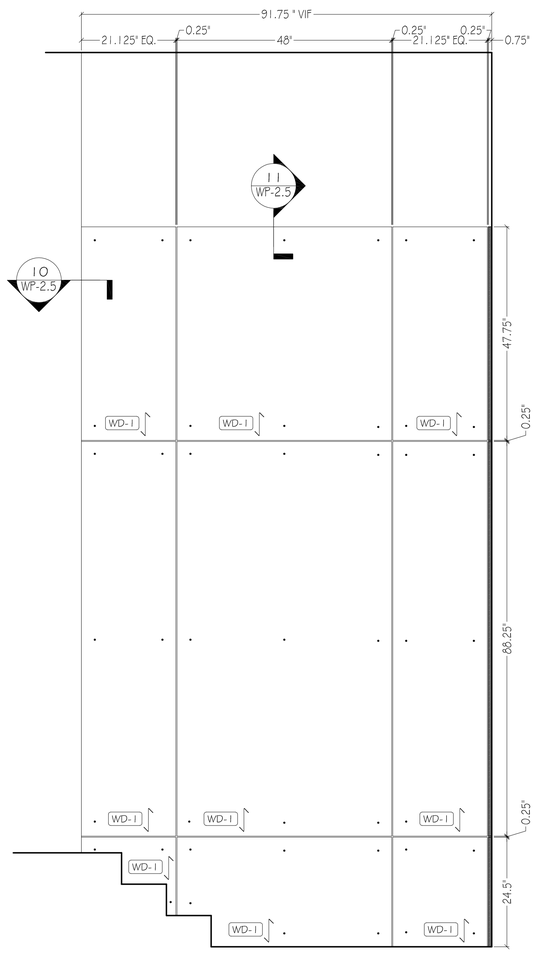

2 ELEVATION: COMMUNICATING STAIR 4302 & 4401
SCALE: 3/4" = 1'-0"
REF: 5/A-701.00

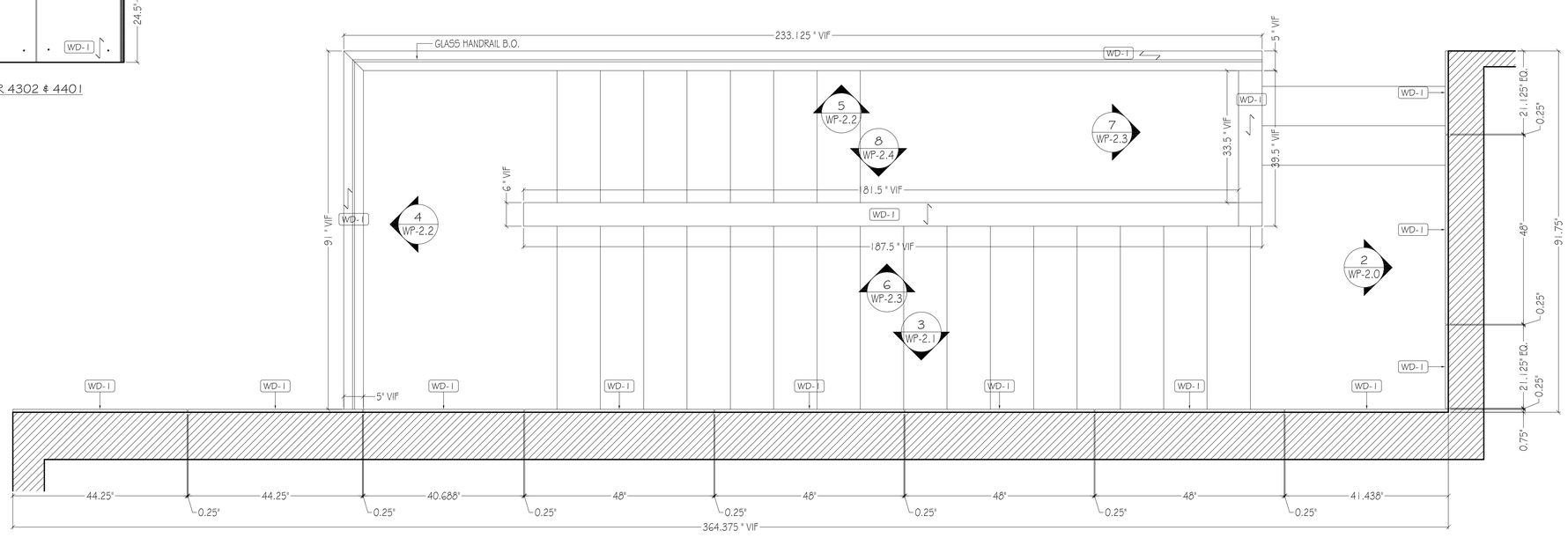

PLASTIC LAMINATE

PL-1	ROBIN REIGI #33516 CANYON HOLZFAELLER OAK.
PL-2	PIONITE #F5593 ANGEL WHITE, SUEDE FINISH
PL-3	PIONITE #SE101 BLACK, SUEDE FINISH
PL-4	PIONITE #SG228 SLATE, SUEDE FINISH
PL-5	FORMICA DECOMETAL #M2178-99 BRUSHED STAINLESS STEEL

WOOD, VENEER, MELAMINE

WD-1	ANDERSON PLYWOOD, $\frac{3}{4}$" THK. PHENOLIC BIRCH VENEER 13 PLY PLYWOOD, NATURAL FINISH
WD-2	
WD-3	
WD-4	
PF-1	
WB-1	SHOP PRIMED, FINAL PAINT B.O.
ML-1	WHITE MELAMINE
ML-2	BLACK MELAMINE
PRIMB	SHOP PRIMED, FINAL PAINT B.O.

SOLID SURFACE, STONE, METAL GLASS

SS-1	CEASARSTONE #2003 CONCRETE, $\frac{3}{4}$" THK. SQUARE EDGE DETAIL BY OTHERS
SS-2	CEASARSTONE #4004 RAW CONCRETE, $\frac{3}{4}$" THK. SQUARE EDGE DETAIL BY OTHERS
ST-1	
ST-2	
MT-1	$\frac{3}{4}$" X 2" X 2" STEEL TUBE, PAINTED BLACK
MT-2	
GL-1	
GL-2	

HARDAWARE

H-1	HINGES: BLUM CLIP TOP 110° CONCEALED HINGES, SELF CLOSING, SOFT CLOSE
H-2	DRAWER SLIDES: RICHELIEU #38322G24, FULL EXTENSION, 24", SOFT CLOSE
H-3	SHELF PINS: RICHELIEU #12352180, NICKLE FINISH
H-4	CAM LOCK
H-5	Z-CLIP: MONARCH METAL FABRICATION #MF375
H-6	CLOSET ROD: RICHELIEU #122208140, 1 $\frac{1}{4}$" DIA, CHROME FINISH
H-7	CLOSET ROD FLANGE: RICHELIEU # 8764114140, 1 $\frac{1}{4}$" DIA. CHROME FINISH
H-8	CENTERLINE STD. GRANITE COUNTERTOP SUPPORT BRACKET 15" LENGTH
H-9	STEEL OUTRIGGER
H-10	$\frac{1}{8}$" x 1 $\frac{1}{2}$" X 1 $\frac{1}{2}$" ALUMINUM ANGLE
H-11	CAM LOCK
H-12	4" BLACK METAL GROMMET
H-13	

MISCELLANEOUS

UP-1	
M-1	
M-2	
M-3	

CONSTRUCTION SPECIFICATIONS

- ☐ LEED
- ☐ FSC
- ☐ GCP
- ☒ A.W.I.- PREMIUM GRADE
- ☐ A.W.I.- CUSTUM GRADE
- ☐ A.W.I.- ECONOMY GRADE

ELEVATOR DIMENSIONS

HEIGHT	
WIDTH	
DEPTH	
DOOR HEIGHT	
DOOR WIDTH	

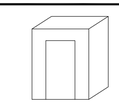

☒ PRELIMINARY DRAWING FOR APPROVAL- ALL DIMENSIONS TO BE VERIFIED

☐ FINAL DRAWING- DIMENSION VERIFIED APPROVED FOR CONSTRUCTION

#	DATE	REVISION
8		
7		
6		
5		
4		
3		
2		
1	10-21-17	REVISED PER ARCHITECTURAL RED LINES

DRAWING SET REFFRENCE	DRAWINGS DATED:	JOB #: 4180
TITLE	COMMUNICATING STAIR 4302/4401	
JOB	RALIXA - 43RD & 44TH FLOORS	
LOCATION	225 LIBERTY STREET NEW YORK, NY	
GENERAL CONTRACTOR	HOLT CONSTRUCTION CORPORATION	DWG #: WP-2.0
ARCHITECT	SPECTORGROUP	
FILE: 4-80-Raxa-43rd-44th Floors-Wlock - 0.33-17.dwg	BY: D.G.R. M.G.	DATE: 9-19-17

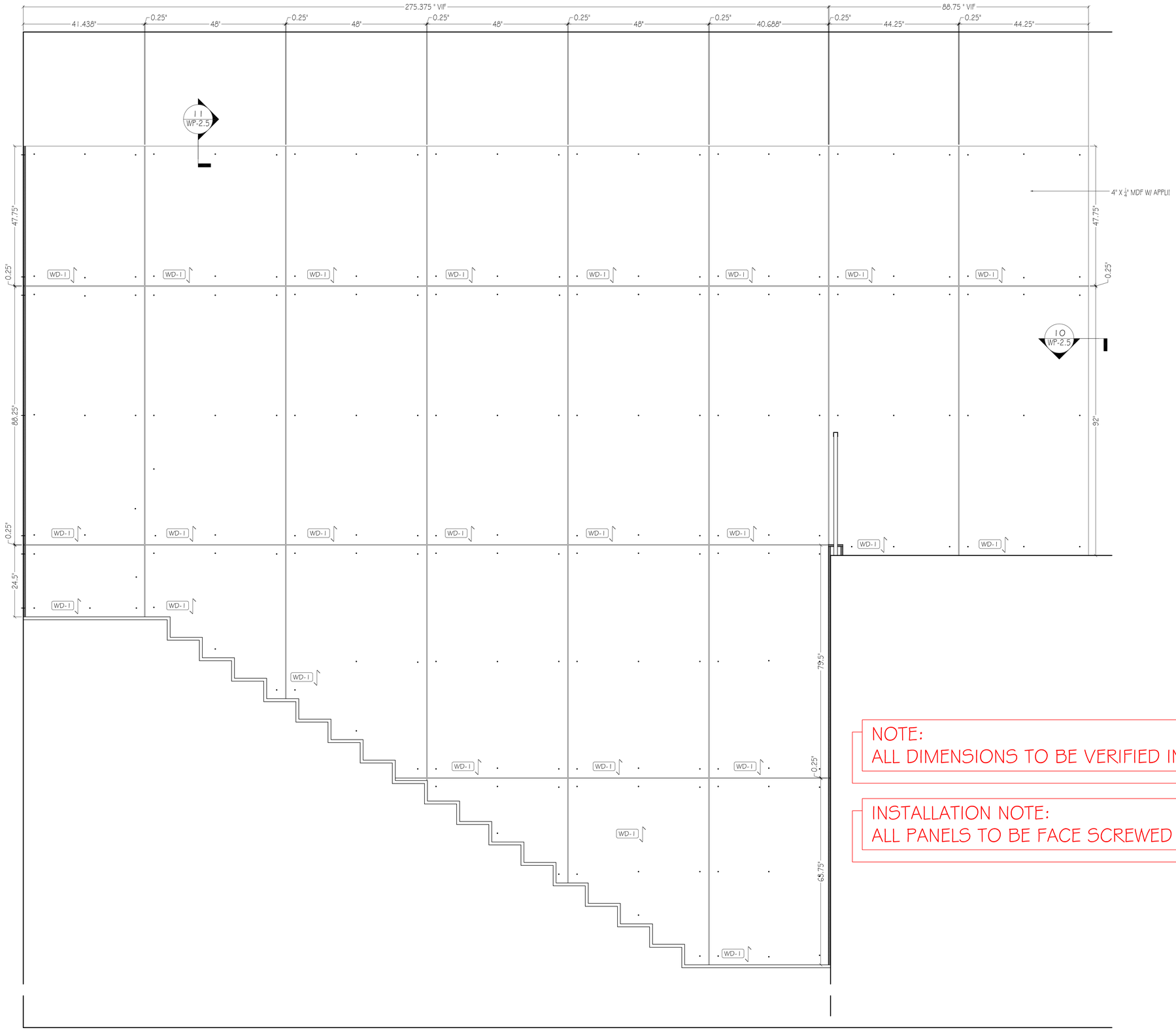

NOTE:
ALL DIMENSIONS TO BE VERIFIED IN FIELD.

INSTALLATION NOTE:
ALL PANELS TO BE FACE SCREWED TO WALL.

3 ELEVATION: COMMUNICATING STAIR 4302 & 4401
SCALE: 3/4" = 1'-0"
REF: 6/A-701.00

PLASTIC LAMINATE

PL-1	ROBIN REIGI #33516 CANYON HOLZTAELLER OAK.
PL-2	PIONITE #F5593 ANGEL WHITE, SUEDE FINISH
PL-3	PIONITE #SE101 BLACK, SUEDE FINISH
PL-4	PIONITE #SG228 SLATE, SUEDE FINISH
PL-5	FORMICA DECOMETAL #M2178-99 BRUSHED STAINLESS STEEL

WOOD, VENEER, MELAMINE

WD-1	ANDERSON PLYWOOD, 3/4" THK. PHENOLIC BIRCH VENEER 13 PLY PLYWOOD, NATURAL FINISH
WD-2	
WD-3	
WD-4	
PF-1	
WB-1	SHOP PRIMED, FINAL PAINT B.O.
ML-1	WHITE MELAMINE
ML-2	BLACK MELAMINE
PRIMB	SHOP PRIMED, FINAL PAINT B.O.

SOLID SURFACE, STONE, METAL GLASS

SS-1	CEASARSTONE #2003 CONCRETE, 3/4" THK. SQUARE EDGE DETAIL BY OTHERS
SS-2	CEASARSTONE #4004 RAW CONCRETE, 3/4" THK. SQUARE EDGE DETAIL BY OTHERS
ST-1	
ST-2	
MT-1	3/4" X 2" X 2" STEEL TUBE, PAINTED BLACK
MT-2	
GL-1	
GL-2	

HARDAWARE

H-1	HINGES: BLUM CLIP TOP 110° CONCEALED HINGES, SELF CLOSING, SOFT CLOSE
H-2	DRAWER SLIDES: RICHELIEU #38322G24, FULL EXTENSION, 24", SOFT CLOSE
H-3	SHELF PINS: RICHELIEU #12352180, NICKLE FINISH
H-4	CAM LOCK
H-5	Z-CLIP: MONARCH METAL FABRICATION #MF375
H-6	CLOSET ROD: RICHELIEU #12220B140, 1 1/4" DIA, CHROME FINISH
H-7	CLOSET ROD FLANGE: RICHELIEU # 8764114140, 1 1/4" DIA. CHROME FINISH
H-8	CENTERLINE STD. GRANITE COUNTERTOP SUPPORT BRACKET 15" LENGTH
H-9	STEEL OUTRIGGER
H-10	1/4" x 1 1/2" X 1 1/2" ALUMINUM ANGLE
H-11	CAM LOCK
H-12	4" BLACK METAL GROMMET
H-13	

MISCELLANEOUS

UP-1	
M-1	
M-2	
M-3	

CONSTRUCTION SPECIFICATIONS

- ☐ LEED
- ☐ FSC
- ☐ GCP
- ☒ A.W.I.- PREMIUM GRADE
- ☐ A.W.I.- CUSTUM GRADE
- ☐ A.W.I.- ECONOMY GRADE

ELEVATOR DIMENSIONS

HEIGHT	
WIDTH	
DEPTH	
DOOR HEIGHT	
DOOR WIDTH	

☒ PRELIMINARY DRAWING FOR APPROVAL- ALL DIMENSIONS TO BE VERIFIED

☐ FINAL DRAWING- DIMENSION VERIFIED APPROVED FOR CONSTRUCTION

#	DATE	REVISION
8		
7		
6		
5		
4		
3		
2		
1	10-21-17	REVISED PER ARCHITECTURAL RED LINES

DRAWING SET REFERENCE	DRAWINGS DATED:	JOB #: 4180
TITLE	COMMUNICATING STAIR 4302/4401	
JOB	RALIXA - 43RD & 44TH FLOORS	
LOCATION	225 LIBERTY STREET NEW YORK, NY	
GENERAL CONTRACTOR	HOLT CONSTRUCTION CORPORATION	DWG #: WP-2.1
ARCHITECT	SPECTORGROUP	
FILE: 4-B3-Rxa-C3-H-Art-Tcrs-Wkgs-03-17.dwg	BY: D.G.R. M.G.	DATE: 9-19-17

NOTE:
ALL DIMENSIONS TO BE VERIFIED IN FIELD.

INSTALLATION NOTE:
ALL PANELS TO BE FACE SCREWED TO WALL.

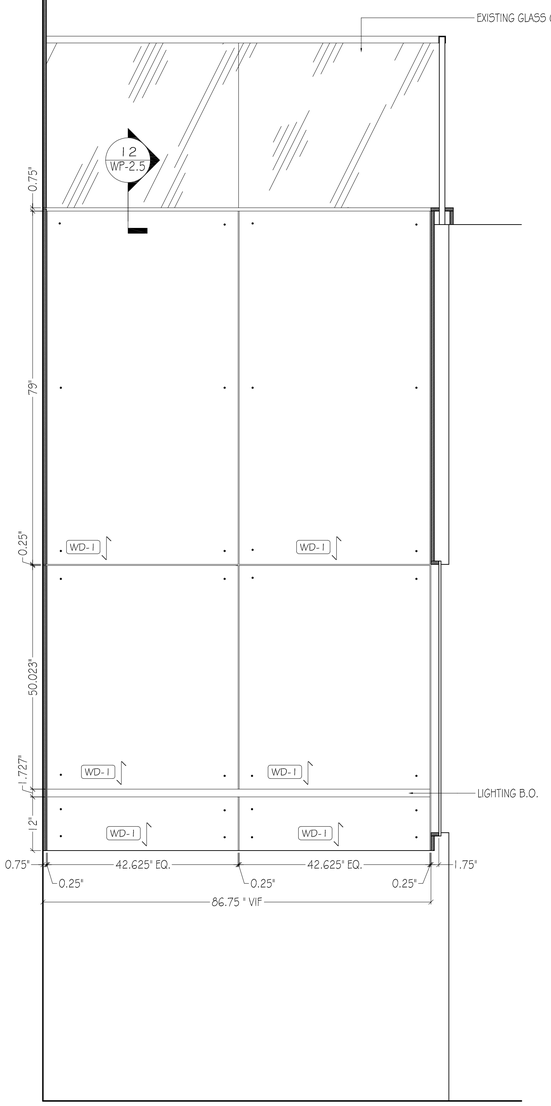

4 ELEVATION: COMMUNICATING STAIR 4302 & 4401
SCALE: 3/4" = 1'-0"
REF: G/A-701.00

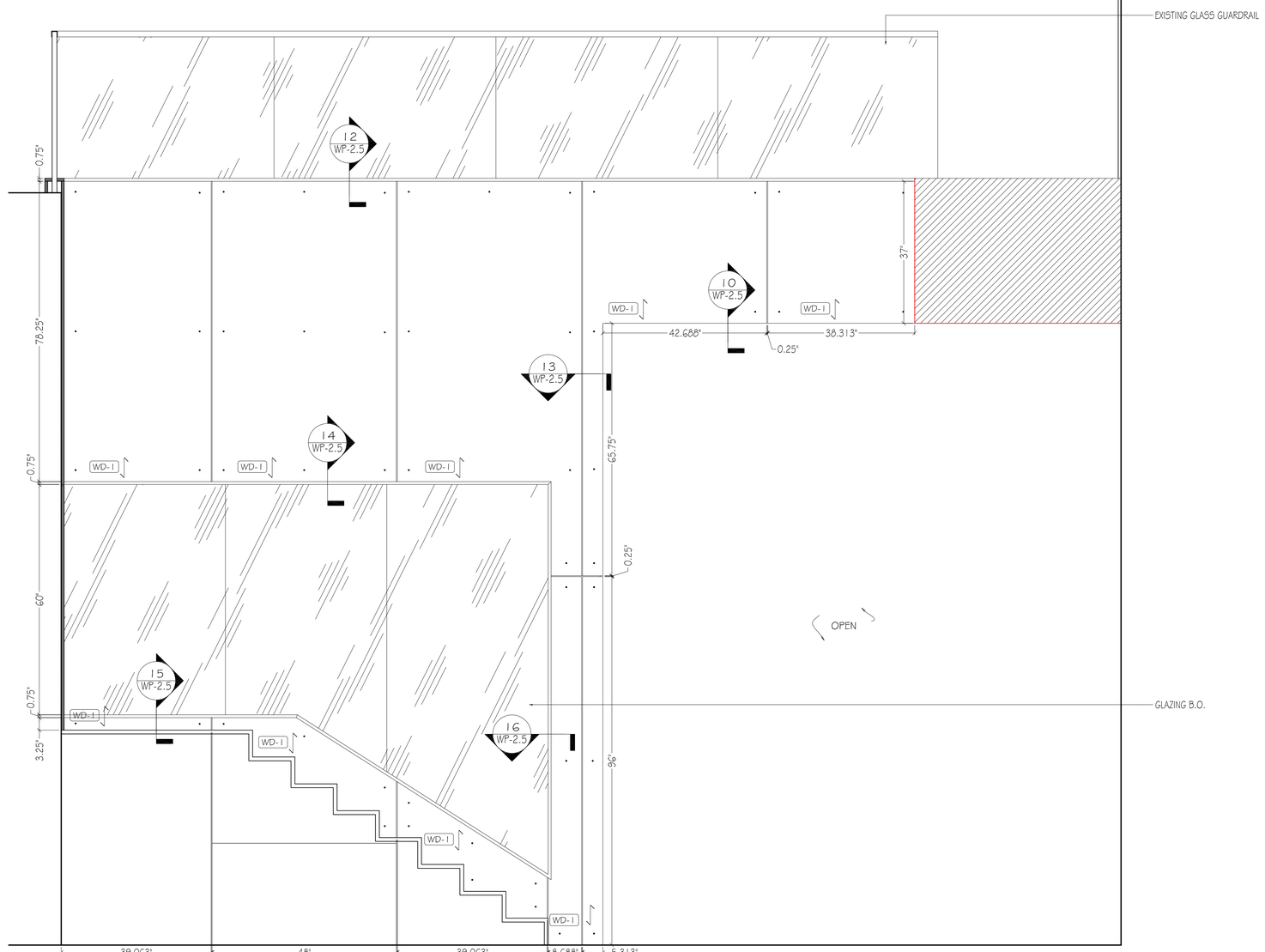

5 ELEVATION: COMMUNICATING STAIR 4302 & 4401
SCALE: 3/4" = 1'-0"

PLASTIC LAMINATE

PL-1	ROBIN REIGI #33516 CANYON HOLZFAELLER OAK.
PL-2	PIONITE #F5593 ANGEL WHITE, SUEDE FINISH
PL-3	PIONITE #SE101 BLACK, SUEDE FINISH
PL-4	PIONITE #SG228 SLATE, SUEDE FINISH
PL-5	FORMICA DECOMETAL #M2178-99 BRUSHED STAINLESS STEEL

WOOD, VENEER, MELAMINE

WD-1	ANDERSON PLYWOOD, $\frac{3}{4}$" THK. PHENOLIC BIRCH VENEER 13 PLY PLYWOOD, NATURAL FINISH
WD-2	
WD-3	
WD-4	
PF-1	
WB-1	SHOP PRIMED, FINAL PAINT B.O.
ML-1	WHITE MELAMINE
ML-2	BLACK MELAMINE
PRIMB	SHOP PRIMED, FINAL PAINT B.O.

SOLID SURFACE, STONE, METAL GLASS

SS-1	CEASARSTONE #2003 CONCRETE, $\frac{3}{4}$" THK. SQUARE EDGE DETAIL BY OTHERS
SS-2	CEASARSTONE #4004 RAW CONCRETE, $\frac{3}{4}$" THK. SQUARE EDGE DETAIL BY OTHERS
ST-1	
ST-2	
MT-1	$\frac{3}{4}$" X 2" X 2" STEEL TUBE, PAINTED BLACK
MT-2	
GL-1	
GL-2	

HARDAWARE

H-1	HINGES: BLUM CLIP TOP 110° CONCEALED HINGES, SELF CLOSING, SOFT CLOSE
H-2	DRAWER SLIDES: RICHELIEU #38322G24, FULL EXTENSION, 24", SOFT CLOSE
H-3	SHELF PINS: RICHELIEU #12352180, NICKLE FINISH
H-4	CAM LOCK
H-5	Z-CLIP: MONARCH METAL FABRICATION #MF375
H-6	CLOSET ROD: RICHELIEU #12220B140, 1 $\frac{1}{4}$" DIA, CHROME FINISH
H-7	CLOSET ROD FLANGE: RICHELIEU # 8764114140, 1 $\frac{1}{4}$" DIA. CHROME FINISH
H-8	CENTERLINE STD. GRANITE COUNTERTOP SUPPORT BRACKET 15" LENGTH
H-9	STEEL OUTRIGGER
H-10	$\frac{1}{4}$" x 1 $\frac{1}{2}$" X 1 $\frac{1}{2}$" ALUMINUM ANGLE
H-11	CAM LOCK
H-12	4" BLACK METAL GROMMET
H-13	

MISCELLANEOUS

UP-1	
M-1	
M-2	
M-3	

CONSTRUCTION SPECIFICATIONS

- ☐ LEED
- ☐ FSC
- ☐ GCP
- ☒ A.W.I.- PREMIUM GRADE
- ☐ A.W.I.- CUSTUM GRADE
- ☐ A.W.I.- ECONOMY GRADE

ELEVATOR DIMENSIONS	
HEIGHT	
WIDTH	
DEPTH	
DOOR HEIGHT	
DOOR WIDTH	

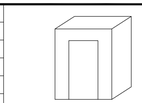

☒ PRELIMINARY DRAWING FOR APPROVAL- ALL DIMENSIONS TO BE VERIFIED

☐ FINAL DRAWING- DIMENSION VERIFIED APPROVED FOR CONSTRUCTION

#	DATE	REVISION
8		
7		
6		
5		
4		
3		
2		
1	10-21-17	REVISED PER ARCHITECTURAL RED LINES

DRAWING SET REFERENCE	DRAWINGS DATED:	JOB #: 4180
TITLE	COMMUNICATING STAIR 4302/4401	
JOB	RAUXA - 43RD & 44TH FLOORS	
LOCATION	225 LIBERTY STREET NEW YORK, NY	
GENERAL CONTRACTOR	HOLT CONSTRUCTION CORPORATION	DWG #: WP-2.2
ARCHITECT	SPECTORGROUP	
FILE: 4-RS-Rauxa-43rd-44th Floors-Mezzan - 17-03-17.dwg	BY: D.G.R. M.G.	DATE: 9-19-17

NOTE:
ALL DIMENSIONS TO BE VERIFIED IN FIELD.

INSTALLATION NOTE:
ALL PANELS TO BE FACE SCREWED TO WALL.

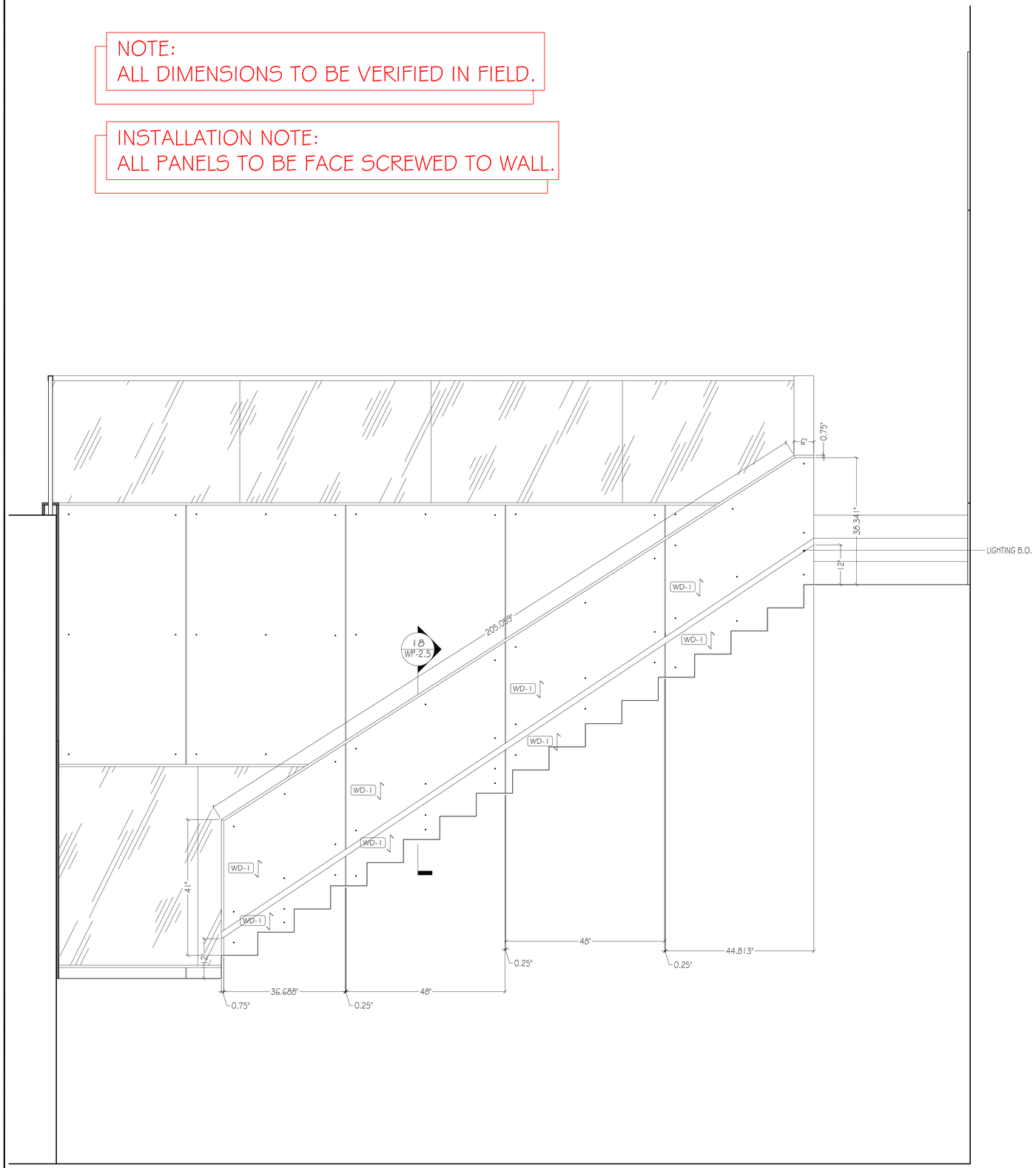

6 ELEVATION: COMMUNICATING STAIR 4302 & 4401
SCALE: 3/4" = 1'-0"
REF: N/A

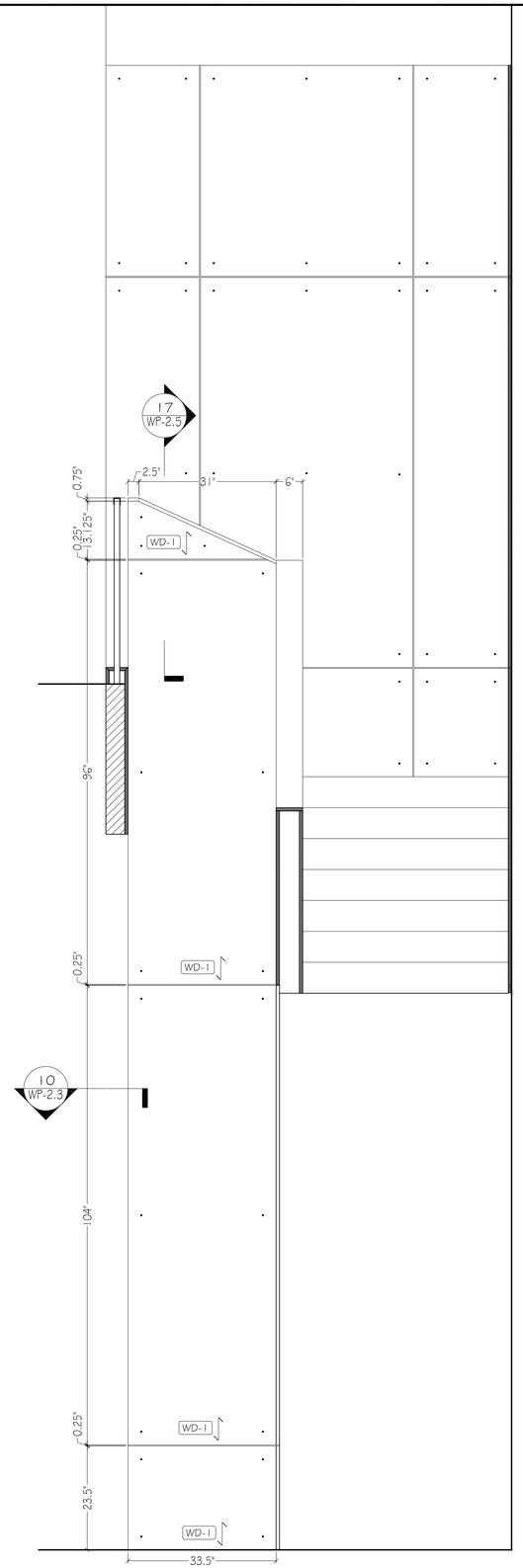

7 ELEVATION: COMMUNICATING STAIR 4302 & 4401
SCALE: 3/4" = 1'-0"
REF: A/A-701.00

PLASTIC LAMINATE

PL-1	ROBIN REIGI #33516 CANYON HOLZFAELLER OAK
PL-2	PIONITE #F5593 ANGEL WHITE, SUEDE FINISH
PL-3	PIONITE #SE101 BLACK, SUEDE FINISH
PL-4	PIONITE #SG228 SLATE, SUEDE FINISH
PL-5	FORMICA DECOMETAL #M2178-99 BRUSHED STAINLESS STEEL

WOOD, VENEER, MELAMINE

WD-1	ANDERSON PLYWOOD, $\frac{3}{4}$" THK. PHENOLIC BIRCH VENEER 13 PLY PLYWOOD, NATURAL FINISH
WD-2	
WD-3	
WD-4	
PF-1	
WB-1	SHOP PRIMED, FINAL PAINT B.O.
ML-1	WHITE MELAMINE
ML-2	BLACK MELAMINE
PRIMB	SHOP PRIMED, FINAL PAINT B.O.

SOLID SURFACE, STONE, METAL GLASS

SS-1	CEASARSTONE #2003 CONCRETE, $\frac{3}{4}$" THK. SQUARE EDGE DETAIL BY OTHERS
SS-2	CEASARSTONE #4004 RAW CONCRETE, $\frac{3}{4}$" THK. SQUARE EDGE DETAIL BY OTHERS
ST-1	
ST-2	
MT-1	$\frac{3}{4}$" X 2" X 2" STEEL TUBE, PAINTED BLACK
MT-2	
GL-1	
GL-2	

HARDAWARE

H-1	HINGES: BLUM CLIP TOP 110° CONCEALED HINGES, SELF CLOSING, SOFT CLOSE
H-2	DRAWER SLIDES: RICHELIEU #38322G24, FULL EXTENSION, 24", SOFT CLOSE
H-3	SHELF PINS: RICHELIEU #12352180, NICKLE FINISH
H-4	CAM LOCK
H-5	Z-CLIP: MONARCH METAL FABRICATION #MF375
H-6	CLOSET ROD: RICHELIEU #122208140, 1 $\frac{1}{4}$" DIA, CHROME FINISH
H-7	CLOSET ROD FLANGE: RICHELIEU # 8764114140, 1 $\frac{1}{4}$" DIA. CHROME FINISH
H-8	CENTERLINE STD. GRANITE COUNTERTOP SUPPORT BRACKET 15" LENGTH
H-9	STEEL OUTRIGGER
H-10	$\frac{1}{4}$" x 1 $\frac{1}{2}$" X 1 $\frac{1}{2}$" ALUMINUM ANGLE
H-11	CAM LOCK
H-12	4" BLACK METAL GROMMET
H-13	

MISCELLANEOUS

UP-1	
M-1	
M-2	
M-3	

CONSTRUCTION SPECIFICATIONS

- ☐ LEED
- ☐ FSC
- ☐ GCP
- ☒ A.W.I.- PREMIUM GRADE
- ☐ A.W.I.- CUSTUM GRADE
- ☐ A.W.I.- ECONOMY GRADE

ELEVATOR DIMENSIONS

HEIGHT	
WIDTH	
DEPTH	
DOOR HEIGHT	
DOOR WIDTH	

☒ PRELIMINARY DRAWING FOR APPROVAL- ALL DIMENSIONS TO BE VERIFIED

☐ FINAL DRAWING- DIMENSION VERIFIED APPROVED FOR CONSTRUCTION

#	DATE	REVISION
8		
7		
6		
5		
4		
3		
2		
1	10-21-17	REVISED PER ARCHITECTURAL RED LINES

DRAWING SET REFFRENCE	DRAWINGS DATED:	JOB #: 4180
TITLE	COMMUNICATING STAIR 4302/4401	
JOB	RALIXA - 43RD & 44TH FLOORS	
LOCATION	225 LIBERTY STREET NEW YORK, NY	
GENERAL CONTRACTOR	HOLT CONSTRUCTION CORPORATION	DWG #: WP-2.3
ARCHITECT	SPECTORGROUP	
FILE: 4-30-Ralixa-43rd-44th Floors-Week-10.13.17.dwg	BY: D.G.R. M.G.	DATE: 9-19-17

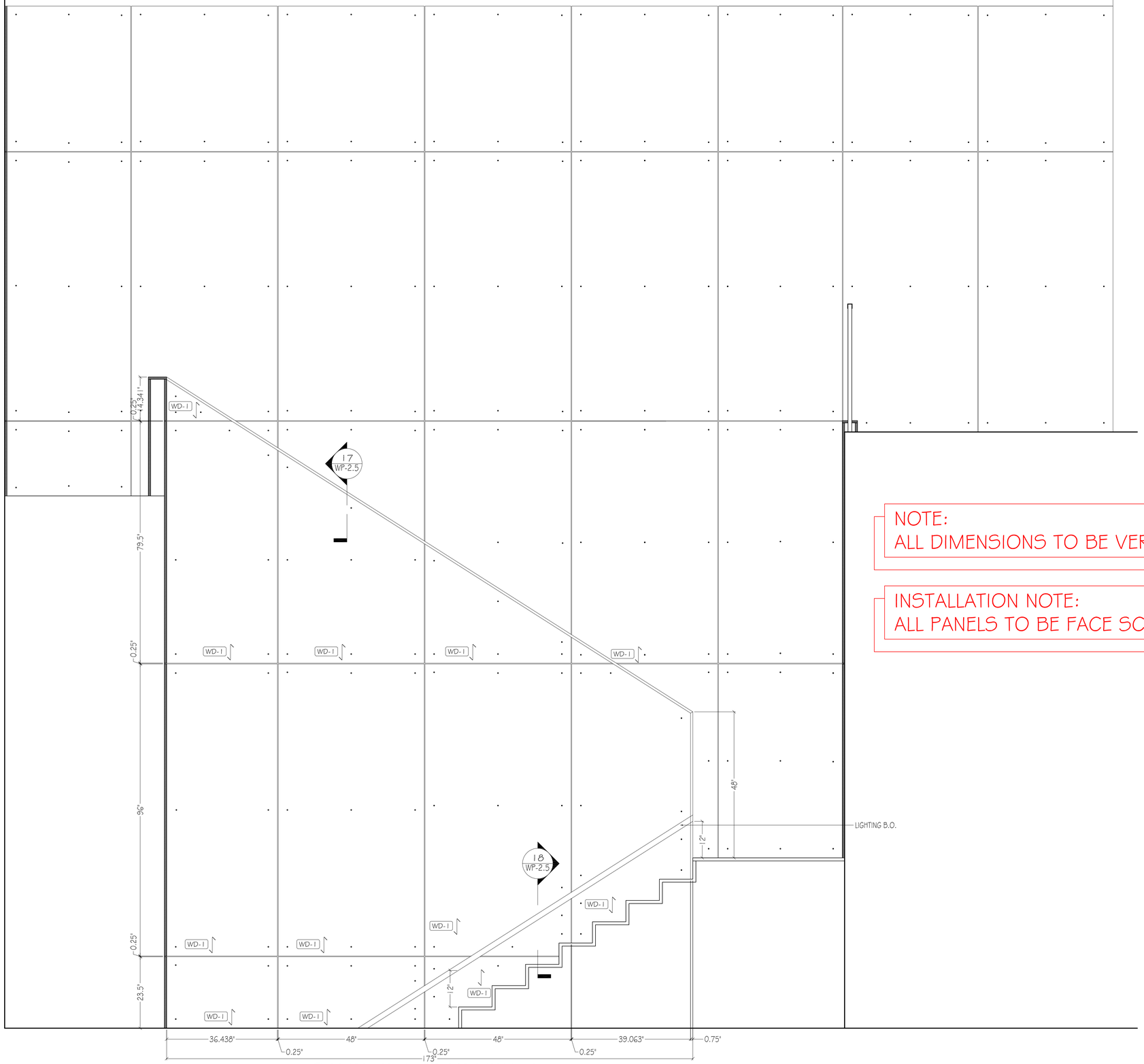

NOTE:
ALL DIMENSIONS TO BE VERIFIED IN FIELD.

INSTALLATION NOTE:
ALL PANELS TO BE FACE SCREWED TO WALL.

8 ELEVATION: COMMUNICATING STAIR 4302 & 4401
SCALE: 3/4" = 1'-0"
REF: N/A

PLASTIC LAMINATE

PL-1	ROBIN REIGI #33516 CANYON HOLZFAELLER OAK
PL-2	PIONITE #F5593 ANGEL WHITE, SUEDE FINISH
PL-3	PIONITE #SE101 BLACK, SUEDE FINISH
PL-4	PIONITE #SG228 SLATE, SUEDE FINISH
PL-5	FORMICA DECOMETAL #M2178-99 BRUSHED STAINLESS STEEL

WOOD, VENEER, MELAMINE

WD-1	ANDERSON PLYWOOD, $\frac{3}{4}$" THK. PHENOLIC BIRCH VENEER 13 PLY PLYWOOD, NATURAL FINISH
WD-2	
WD-3	
WD-4	
PF-1	
WB-1	SHOP PRIMED, FINAL PAINT B.O.
ML-1	WHITE MELAMINE
ML-2	BLACK MELAMINE
PRIMB	SHOP PRIMED, FINAL PAINT B.O.

SOLID SURFACE, STONE, METAL GLASS

SS-1	CEASARSTONE #2003 CONCRETE, $\frac{3}{4}$" THK. SQUARE EDGE DETAIL BY OTHERS
SS-2	CEASARSTONE #4004 RAW CONCRETE, $\frac{3}{4}$" THK. SQUARE EDGE DETAIL BY OTHERS
ST-1	
ST-2	
MT-1	$\frac{3}{4}$" X 2" X 2" STEEL TUBE, PAINTED BLACK
MT-2	
GL-1	
GL-2	

HARDAWARE

H-1	HINGES: BLUM CLIP TOP 110° CONCEALED HINGES, SELF CLOSING, SOFT CLOSE
H-2	DRAWER SLIDES: RICHELIEU #38322G24, FULL EXTENSION, 24", SOFT CLOSE
H-3	SHELF PINS: RICHELIEU #12352180, NICKLE FINISH
H-4	CAM LOCK
H-5	Z-CLIP: MONARCH METAL FABRICATION #MF375
H-6	CLOSET ROD: RICHELIEU #12220B140, 1 $\frac{1}{4}$" DIA, CHROME FINISH
H-7	CLOSET ROD FLANGE: RICHELIEU # 8764114140, 1 $\frac{1}{4}$" DIA. CHROME FINISH
H-8	CENTERLINE STD. GRANITE COUNTERTOP SUPPORT BRACKET 15" LENGTH
H-9	STEEL OUTRIGGER
H-10	$\frac{1}{8}$" x 1 $\frac{1}{2}$" X 1 $\frac{1}{2}$" ALUMINUM ANGLE
H-11	CAM LOCK
H-12	4" BLACK METAL GROMMET
H-13	

MISCELLANEOUS

UP-1	
M-1	
M-2	
M-3	

CONSTRUCTION SPECIFICATIONS

- ☐ LEED
- ☐ FSC
- ☐ GCP
- ☒ A.W.I.- PREMIUM GRADE
- ☐ A.W.I.- CUSTUM GRADE
- ☐ A.W.I.- ECONOMY GRADE

ELEVATOR DIMENSIONS	
HEIGHT	
WIDTH	
DEPTH	
DOOR HEIGHT	
DOOR WIDTH	

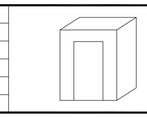

☒ PRELIMINARY DRAWING FOR APPROVAL- ALL DIMENSIONS TO BE VERIFIED

☐ FINAL DRAWING- DIMENSION VERIFIED APPROVED FOR CONSTRUCTION

#	DATE	REVISION
8		
7		
6		
5		
4		
3		
2		
1	10-21-17	REVISED PER ARCHITECTURAL RED LINES

DRAWING SET REFERENCE	DRAWINGS DATED:	JOB #: 4180
TITLE	COMMUNICATING STAIR 4302/4401	
JOB	RAUXA - 43RD & 44TH FLOORS	
LOCATION	225 LIBERTY STREET NEW YORK, NY	
GENERAL CONTRACTOR	HOLT CONSTRUCTION CORPORATION	DWG #: WP-2.4
ARCHITECT	SPECTORGROUP	
FILE: 4-RS-Rauxa-43rd-44th Floors-Mezzan-17.33-17.dwg	BY: D.G.R. M.G.	DATE: 9-19-17

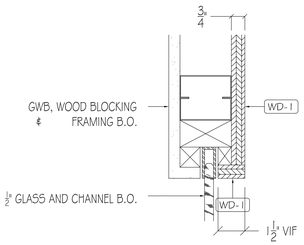

14 VERTICAL SECTION
SCALE: 3" = 1'-0"
REF: N/A

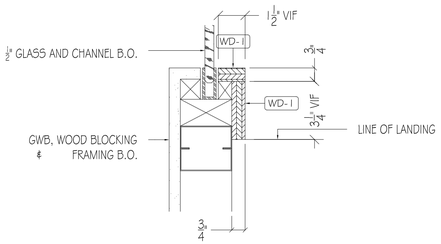

15 VERTICAL SECTION
SCALE: 3" = 1'-0"
REF: N/A

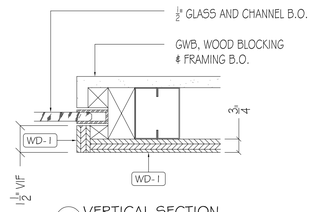

16 VERTICAL SECTION
SCALE: 3" = 1'-0"
REF: N/A

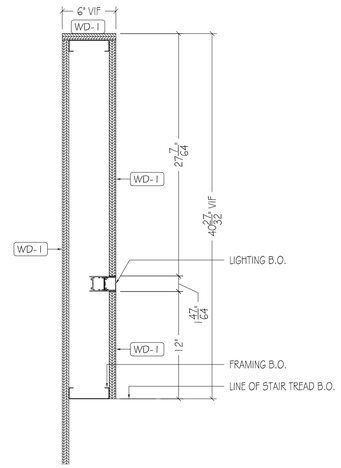

17 VERTICAL SECTION
SCALE: 1-1/2" = 1'-0"
REF: 9/A-701.00

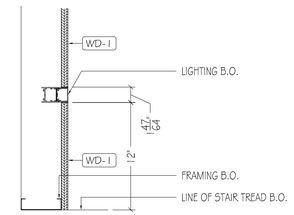

18 VERTICAL SECTION
SCALE: 1-1/2" = 1'-0"
REF: 9/A-701.00

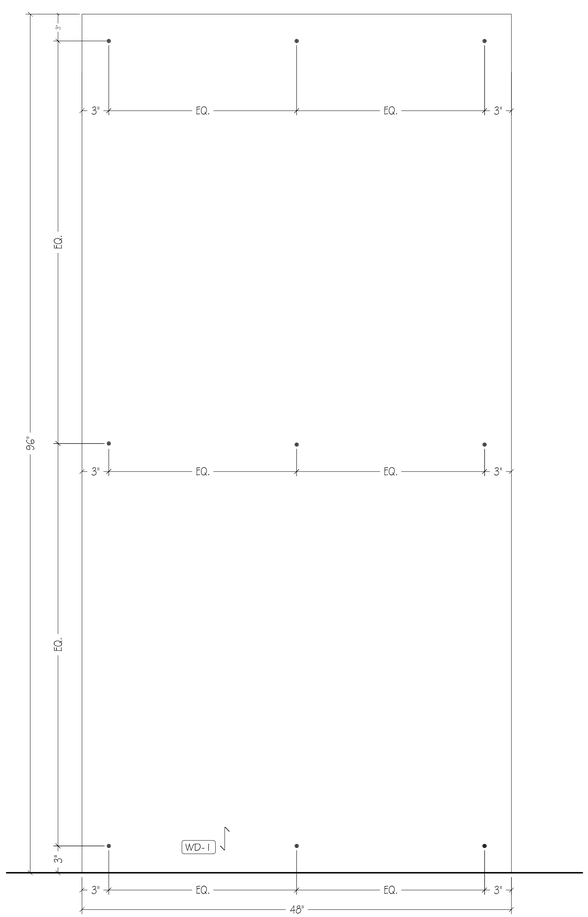

9 ELEVATION: SCREW PATTERN
SCALE: 1 1/2" = 1'-0"
REF: 6/A-701.00

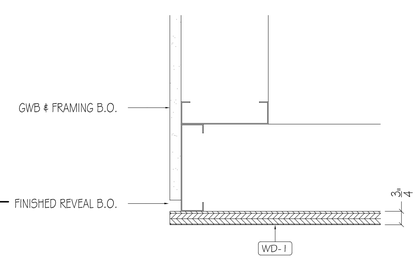

10 HORIZONTAL SECTION
SCALE: 3" = 1'-0"
REF: A2/A-290.00

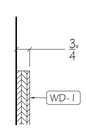

11 VERTICAL SECTION
SCALE: 3" = 1'-0"
REF: N/A

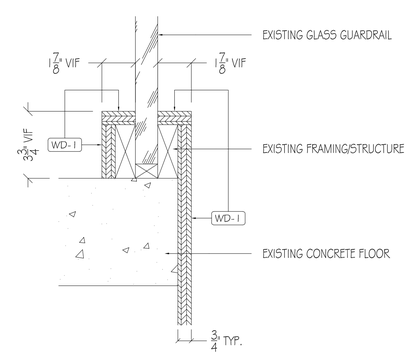

12 VERTICAL SECTION
SCALE: 3" = 1'-0"
REF: 9/A-802.00

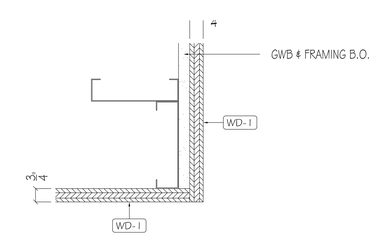

13 VERTICAL SECTION
SCALE: 3" = 1'-0"
REF: 9/A-802.00

PLASTIC LAMINATE

PL-1	ROBIN REIGI #33516 CANYON HOLZFAELLER OAK.
PL-2	PIONITE #F5593 ANGEL WHITE, SUEDE FINISH
PL-3	PIONITE #SE101 BLACK, SUEDE FINISH
PL-4	PIONITE #SG228 SLATE, SUEDE FINISH
PL-5	FORMICA DECOMETAL #M2178-99 BRUSHED STAINLESS STEEL

WOOD, VENEER, MELAMINE

WD-1	ANDERSON PLYWOOD, 3/4" THK. PHENOLIC BIRCH VENEER 13 PLY PLYWOOD, NATURAL FINISH
WD-2	
WD-3	
WD-4	
PF-1	
WB-1	SHOP PRIMED, FINAL PAINT B.O.
ML-1	WHITE MELAMINE
ML-2	BLACK MELAMINE
PRIMB	SHOP PRIMED, FINAL PAINT B.O.

SOLID SURFACE, STONE, METAL GLASS

SS-1	CEASARSTONE #2003 CONCRETE, 3/4" THK. SQUARE EDGE DETAIL BY OTHERS
SS-2	CEASARSTONE #4004 RAW CONCRETE, 3/4" THK. SQUARE EDGE DETAIL BY OTHERS
ST-1	
ST-2	
MT-1	3/4" X 2" X 2" STEEL TUBE, PAINTED BLACK.
MT-2	
GL-1	
GL-2	

HARDAWARE

H-1	HINGES: BLUM CLIP TOP 110° CONCEALED HINGES, SELF CLOSING, SOFT CLOSE
H-2	DRAWER SLIDES: RICHELIEU #38322G24, FULL EXTENSION, 24", SOFT CLOSE
H-3	SHELF PINS: RICHELIEU #12352180, NICKLE FINISH
H-4	CAM LOCK
H-5	Z-CLIP: MONARCH METAL FABRICATION #MF375
H-6	CLOSET ROD: RICHELIEU #122208140, 1 1/4" DIA, CHROME FINISH
H-7	CLOSET ROD FLANGE: RICHELIEU # 8764114140, 1 3/4" DIA. CHROME FINISH
H-8	CENTERLINE STD. GRANITE COUNTERTOP SUPPORT BRACKET 15" LENGTH
H-9	STEEL OUTRIGGER
H-10	1/4" x 1 1/2" X 1 1/2" ALUMINUM ANGLE
H-11	CAM LOCK
H-12	4" BLACK METAL GROMMET
H-13	

MISCELLANEOUS

UP-1	
M-1	
M-2	
M-3	

CONSTRUCTION SPECIFICATIONS

- ☐ LEED
- ☐ FSC
- ☐ QCP
- ☒ A.W.I.- PREMIUM GRADE
- ☐ A.W.I.- CUSTUM GRADE
- ☐ A.W.I.- ECONOMY GRADE

ELEVATOR DIMENSIONS	
HEIGHT	
WIDTH	
DEPTH	
DOOR HEIGHT	
DOOR WIDTH	

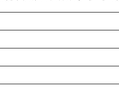

☒ PRELIMINARY DRAWING FOR APPROVAL- ALL DIMENSIONS TO BE VERIFIED

☐ FINAL DRAWING- DIMENSION VERIFIED APPROVED FOR CONSTRUCTION

#	DATE	REVISION
8		
7		
6		
5		
4		
3		
2		
1	10-21-17	REVISED PER ARCHITECTURAL RED LINES

DRAWING SET REFERENCE	DRAWINGS DATED:	JOB #: 4180
TITLE	COMMUNICATING STAIR 4302/4401	
JOB	RALIXA - 43RD & 44TH FLOORS	
LOCATION	225 LIBERTY STREET NEW YORK, NY	
GENERAL CONTRACTOR	HOLT CONSTRUCTION CORPORATION	DWG #: WP-2.5
ARCHITECT	SPECTORGROUP	
FILE: 4-30-Rxxx-0-01-H-WD-Tyrs-Wmsh-10-20-17.dwg	BY: D.G.R. M.G.	DATE: 9-19-17

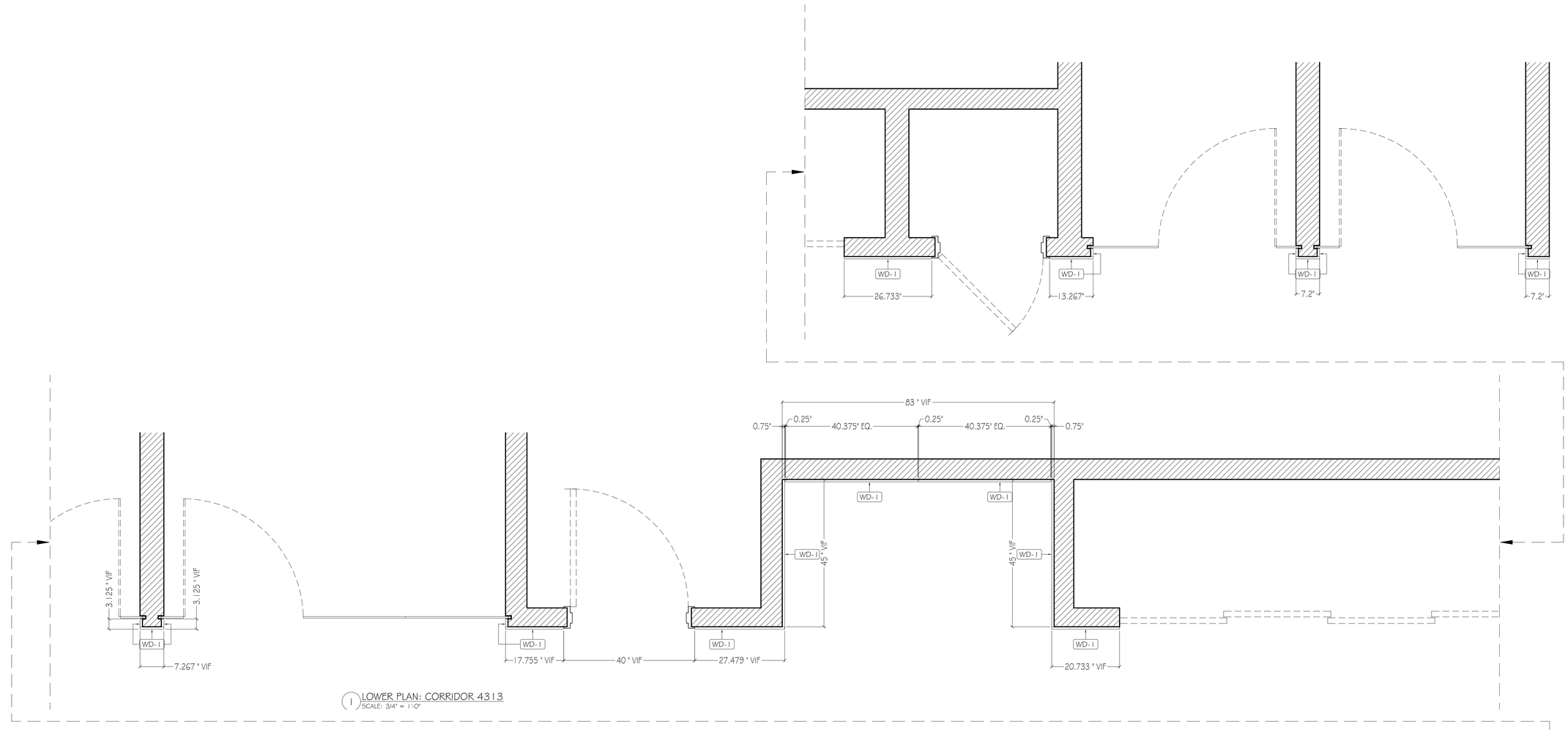

1 LOWER PLAN: CORRIDOR 4313
SCALE: 3/4" = 1'-0"

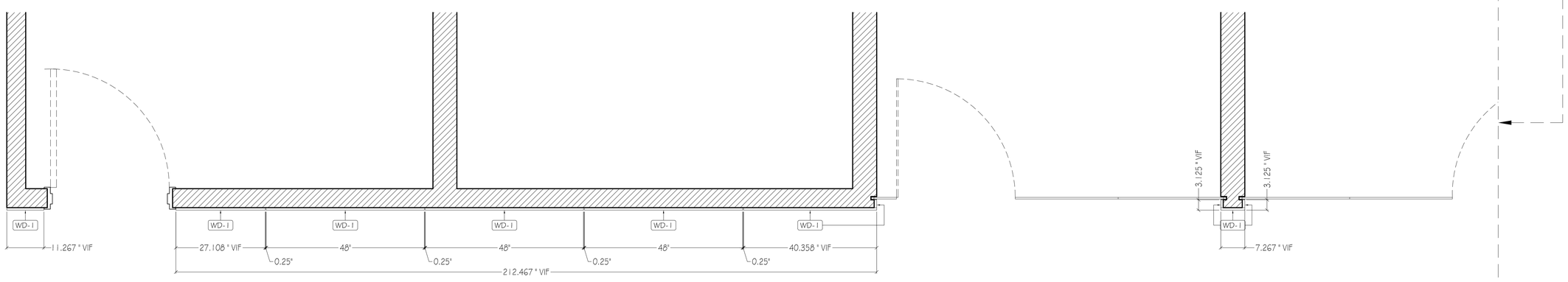

PLASTIC LAMINATE

PL-1	ROBIN REIGI #33516 CANYON HOLZFAELLER OAK.
PL-2	PIONITE #F5593 ANGEL WHITE, SUEDE FINISH
PL-3	PIONITE #SE101 BLACK, SUEDE FINISH
PL-4	PIONITE #SG228 SLATE, SUEDE FINISH
PL-5	FORMICA DECOMETAL #M2178-99 BRUSHED STAINLESS STEEL

WOOD, VENEER, MELAMINE

WD-1	ANDERSON PLYWOOD, $\frac{3}{4}$" THK. PHENOLIC BIRCH VENEER 13 PLY PLYWOOD, NATURAL FINISH
WD-2	
WD-3	
WD-4	
PF-1	
WB-1	SHOP PRIMED, FINAL PAINT B.O.
ML-1	WHITE MELAMINE
ML-2	BLACK MELAMINE
PRIMB	SHOP PRIMED, FINAL PAINT B.O.

SOLID SURFACE, STONE, METAL GLASS

SS-1	CEASARSTONE #2003 CONCRETE, $\frac{3}{4}$" THK. SQUARE EDGE DETAIL BY OTHERS
SS-2	CEASARSTONE #4004 RAW CONCRETE, $\frac{3}{4}$" THK. SQUARE EDGE DETAIL BY OTHERS
ST-1	
ST-2	
MT-1	$\frac{3}{4}$" X 2" X 2" STEEL TUBE, PAINTED BLACK
MT-2	
GL-1	
GL-2	

HARDAWARE

H-1	HINGES: BLUM CLIP TOP 110° CONCEALED HINGES, SELF CLOSING, SOFT CLOSE
H-2	DRAWER SLIDES: RICHELIEU #38322G24, FULL EXTENSION, 24", SOFT CLOSE
H-3	SHELF PINS: RICHELIEU #12352180, NICKLE FINISH
H-4	CAM LOCK
H-5	Z-CLIP: MONARCH METAL FABRICATION #MF375
H-6	CLOSET ROD: RICHELIEU #12220B140, 1 $\frac{1}{4}$" DIA, CHROME FINISH
H-7	CLOSET ROD FLANGE: RICHELIEU # 8764114140, 1 $\frac{1}{4}$" DIA. CHROME FINISH
H-8	CENTERLINE STD. GRANITE COUNTERTOP SUPPORT BRACKET 15" LENGTH
H-9	STEEL OUTRIGGER
H-10	$\frac{1}{8}$" x 1 $\frac{1}{2}$" X 1 $\frac{1}{2}$" ALUMINUM ANGLE
H-11	CAM LOCK
H-12	4" BLACK METAL GROMMET
H-13	

MISCELLANEOUS

UP-1	
M-1	
M-2	
M-3	

CONSTRUCTION SPECIFICATIONS

- ☐ LEED
- ☐ FSC
- ☐ GCP
- ☒ A.W.I.- PREMIUM GRADE
- ☐ A.W.I.- CUSTUM GRADE
- ☐ A.W.I.- ECONOMY GRADE

ELEVATOR DIMENSIONS	
HEIGHT	
WIDTH	
DEPTH	
DOOR HEIGHT	
DOOR WIDTH	

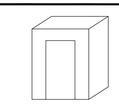

☒ PRELIMINARY DRAWING FOR APPROVAL- ALL DIMENSIONS TO BE VERIFIED

☐ FINAL DRAWING- DIMENSION VERIFIED APPROVED FOR CONSTRUCTION

#	DATE	REVISION
8		
7		
6		
5		
4		
3		
2		
1	10-21-17	REVISED PER ARCHITECTURAL RED LINES

DRAWING SET REFERENCE	DRAWINGS DATED:	JOB #: 4180
TITLE	CORRIDOR 4313	
JOB	RALIXA - 43RD & 44TH FLOORS	
LOCATION	225 LIBERTY STREET NEW YORK, NY	
GENERAL CONTRACTOR	HOLT CONSTRUCTION CORPORATION	DWG #: WP-3.0
ARCHITECT	SPECTORGROUP	
FILE: 4-85-Ralix-43rd 44th Floors-Models-D.D.-1.dwg	BY: D.G.R. M.G.	DATE: 9-19-17

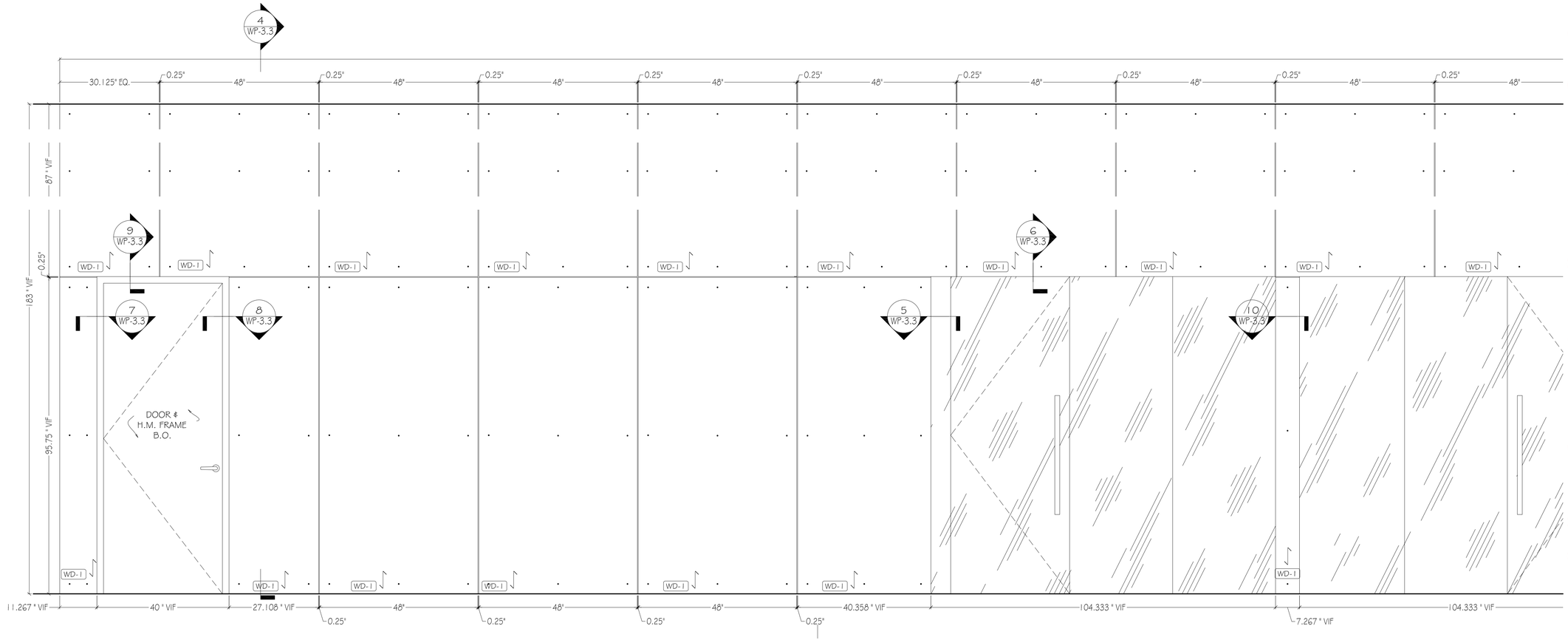

CONTINUED ON WP-3.2

INSTALLATION NOTE:
ALL PANELS TO BE FACE SCREWED TO WALL.

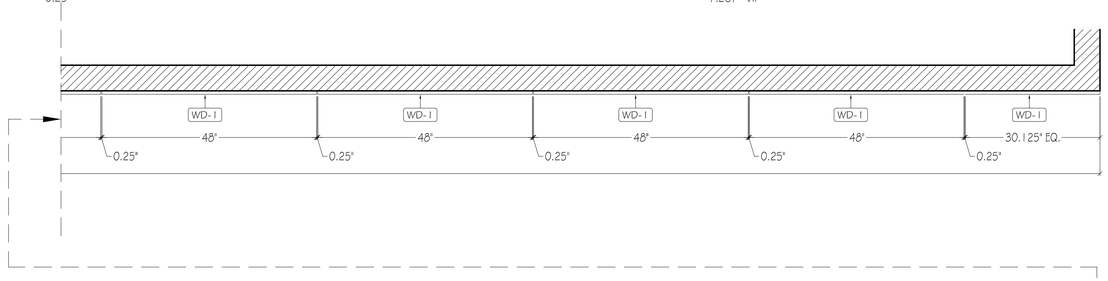

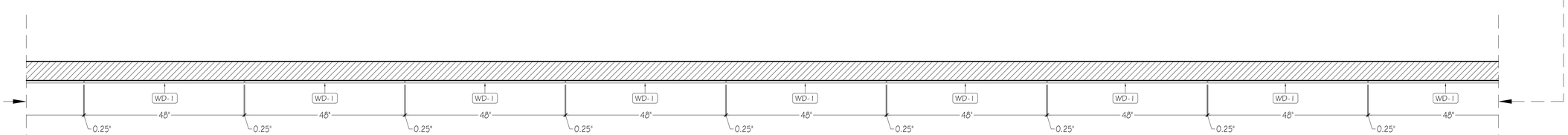

2 UPPER PLAN: CORRIDOR 4313
SCALE: 3/4" = 1'-0"
REF: 1/A-201.00

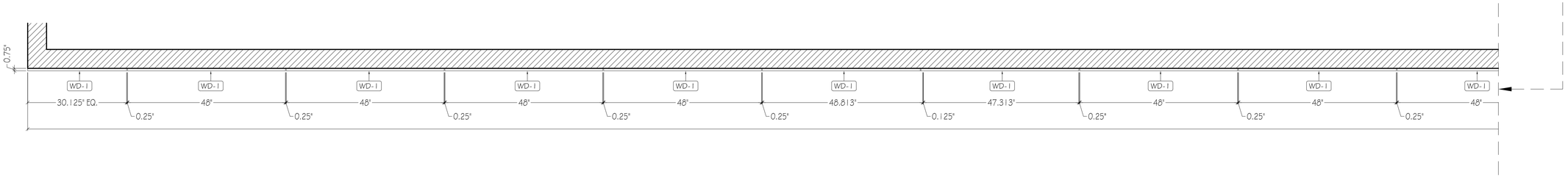

PLASTIC LAMINATE

PL-1	ROBIN REIGI #33516 CANYON HOLZFAELLER OAK
PL-2	PIONITE #F5593 ANGEL WHITE, SUEDE FINISH
PL-3	PIONITE #SE101 BLACK, SUEDE FINISH
PL-4	PIONITE #SG228 SLATE, SUEDE FINISH
PL-5	FORMICA DECOMETAL #M2178-99 BRUSHED STAINLESS STEEL

WOOD, VENEER, MELAMINE

WD-1	ANDERSON PLYWOOD, $\frac{3}{4}$" THK. PHENOLIC BIRCH VENEER 13 PLY PLYWOOD, NATURAL FINISH
WD-2	
WD-3	
WD-4	
PF-1	
WB-1	SHOP PRIMED, FINAL PAINT B.O.
ML-1	WHITE MELAMINE
ML-2	BLACK MELAMINE
PRIMB	SHOP PRIMED, FINAL PAINT B.O.

SOLID SURFACE, STONE, METAL GLASS

SS-1	CEASARSTONE #2003 CONCRETE, $\frac{3}{4}$" THK. SQUARE EDGE DETAIL BY OTHERS
SS-2	CEASARSTONE #4004 RAW CONCRETE, $\frac{3}{4}$" THK. SQUARE EDGE DETAIL BY OTHERS
ST-1	
ST-2	
MT-1	$\frac{3}{4}$" X 2" X 2" STEEL TUBE, PAINTED BLACK
MT-2	
GL-1	
GL-2	

HARDWARE

H-1	HINGES: BLUM CLIP TOP 110° CONCEALED HINGES, SELF CLOSING, SOFT CLOSE
H-2	DRAWER SLIDES: RICHELIEU #38322G24, FULL EXTENSION, 24", SOFT CLOSE
H-3	SHELF PINS: RICHELIEU #12352180, NICKLE FINISH
H-4	CAM LOCK
H-5	Z-CLIP: MONARCH METAL FABRICATION #MF375
H-6	CLOSET ROD: RICHELIEU #122208140, 1 $\frac{1}{4}$" DIA, CHROME FINISH
H-7	CLOSET ROD FLANGE: RICHELIEU # 8764114140, 1 $\frac{1}{4}$" DIA. CHROME FINISH
H-8	CENTERLINE STD. GRANITE COUNTERTOP SUPPORT BRACKET 15" LENGTH
H-9	STEEL OUTRIGGER
H-10	$\frac{1}{4}$" x 1 $\frac{1}{2}$" X 1 $\frac{1}{2}$" ALUMINUM ANGLE
H-11	CAM LOCK
H-12	4" BLACK METAL GROMMET
H-13	

MISCELLANEOUS

UP-1	
M-1	
M-2	
M-3	

CONSTRUCTION SPECIFICATIONS

- ☐ LEED
- ☐ FSC
- ☐ QCP
- ■ A.W.I.- PREMIUM GRADE
- ☐ A.W.I.- CUSTUM GRADE
- ☐ A.W.I.- ECONOMY GRADE

ELEVATOR DIMENSIONS

HEIGHT	
WIDTH	
DEPTH	
DOOR HEIGHT	
DOOR WIDTH	

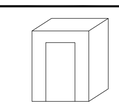

■ PRELIMINARY DRAWING FOR APPROVAL- ALL DIMENSIONS TO BE VERIFIED

☐ FINAL DRAWING- DIMENSION VERIFIED APPROVED FOR CONSTRUCTION

#	DATE	REVISION
8		
7		
6		
5		
4		
3		
2		
1	10-21-17	REVISED PER ARCHITECTURAL RED LINES

DRAWING SET REFERENCE	DRAWINGS DATED:	JOB #: 4180
TITLE	CORRIDOR 4313	
JOB	RAUXA - 43RD & 44TH FLOORS	
LOCATION	225 LIBERTY STREET NEW YORK, NY	
GENERAL CONTRACTOR	HOLT CONSTRUCTION CORPORATION	DWG #: WP-3.1
ARCHITECT	SPECTORGROUP	
FILE: 4-30-Rauxa-Corridor-Wpdx-Wpdx-10-20-17.dwg	BY: D.G.R. M.G.	DATE: 9-19-17

INSTALLATION NOTE:
ALL PANELS TO BE FACE SCREWED TO WALL.

CONTINUED FROM WP-3.1

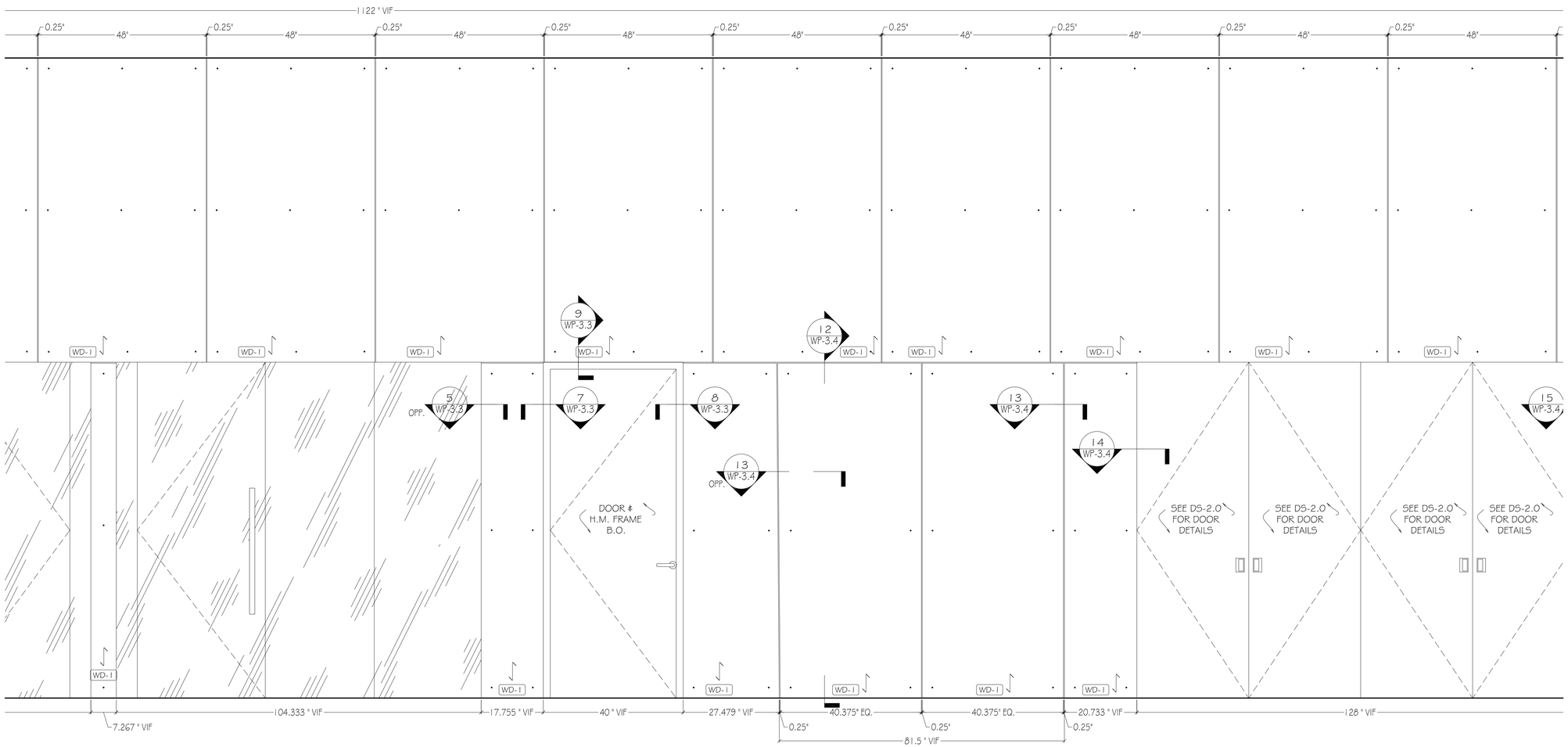

3 ELEVATION: CORRIDOR 4313
SCALE: 3/4" = 1'-0"
REF: 13/A-600.00

CONTINUED ON WP-3.3

PLASTIC LAMINATE

PL-1	ROBIN REIGI #33516 CANYON HOLZFAELLER OAK
PL-2	PIONITE #FS593 ANGEL WHITE, SUEDE FINISH
PL-3	PIONITE #SE101 BLACK, SUEDE FINISH
PL-4	PIONITE #SG228 SLATE, SUEDE FINISH
PL-5	FORMICA DECOMETAL #M2178-99 BRUSHED STAINLESS STEEL

WOOD, VENEER, MELAMINE

WD-1	ANDERSON PLYWOOD, 3/4" THK. PHENOLIC BIRCH VENEER 13 PLY PLYWOOD, NATURAL FINISH
WD-2	
WD-3	
WD-4	
PF-1	
WB-1	SHOP PRIMED, FINAL PAINT B.O.
ML-1	WHITE MELAMINE
ML-2	BLACK MELAMINE
PRIME	SHOP PRIMED, FINAL PAINT B.O.

SOLID SURFACE, STONE, METAL GLASS

SS-1	CEASARSTONE #2003 CONCRETE, 3/4" THK. SQUARE EDGE DETAIL BY OTHERS
SS-2	CEASARSTONE #4004 RAW CONCRETE, 3/4" THK. SQUARE EDGE DETAIL BY OTHERS
ST-1	
ST-2	
MT-1	1/8" X 2" X 2" STEEL TUBE, PAINTED BLACK
MT-2	
GL-1	
GL-2	

HARDAWARE

H-1	HINGES: BLUM CLIP TOP 110° CONCEALED HINGES, SELF CLOSING, SOFT CLOSE
H-2	DRAWER SLIDES: RICHELIEU #38322G24, FULL EXTENSION, 24", SOFT CLOSE
H-3	SHELF PINS: RICHELIEU #12352180, NICKLE FINISH
H-4	CAM LOCK
H-5	Z-CLIP: MONARCH METAL FABRICATION #MF375
H-6	CLOSET ROD: RICHELIEU #122208140, 1 1/4" DIA. CHROME FINISH
H-7	CLOSET ROD FLANGE: RICHELIEU # 87641141 40, 1 1/4" DIA. CHROME FINISH
H-8	CENTERLINE STD. GRANITE COUNTERTOP SUPPORT BRACKET 15" LENGTH
H-9	STEEL OUTRIGGER
H-10	1/2" x 1 1/2" X 1 1/2" ALUMINUM ANGLE
H-11	CAM LOCK
H-12	4" BLACK METAL GROMMET
H-13	

MISCELLANEOUS

UP-1	
M-1	
M-2	
M-3	

CONSTRUCTION SPECIFICATIONS

- ☐ LEED
- ☐ FSC
- ☐ QCP
- ■ A.W.I.- PREMIUM GRADE
- ☐ A.W.I.- CUSTUM GRADE
- ☐ A.W.I.- ECONOMY GRADE

ELEVATOR DIMENSIONS

HEIGHT	
WIDTH	
DEPTH	
DOOR HEIGHT	
DOOR WIDTH	

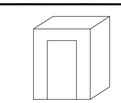

■ PRELIMINARY DRAWING FOR APPROVAL- ALL DIMENSIONS TO BE VERIFIED

☐ FINAL DRAWING- DIMENSION VERIFIED APPROVED FOR CONSTRUCTION

#	DATE	REVISION
8		
7		
6		
5		
4		
3		
2		
1	10-21-17	REVISED PER ARCHITECTURAL RED LINES

DRAWING SET REFERENCE	DRAWINGS DATED:	JOB #: 4180
TITLE	CORRIDOR 4313	
JOB	RAUXA - 43RD & 44TH FLOORS	
LOCATION	225 LIBERTY STREET NEW YORK, NY	
GENERAL CONTRACTOR	HOLT CONSTRUCTION CORPORATION	DWG #: WP-3.2
ARCHITECT	SPECTORGROUP	
FILE: 4-180-Raux 43rd & 44th Floors - Milwaukee - 10-30-17.dwg	BY: D.G.R. M.G.	DATE: 9-19-17

INSTALLATION NOTE:
ALL PANELS TO BE FACE SCREWED TO WALL.

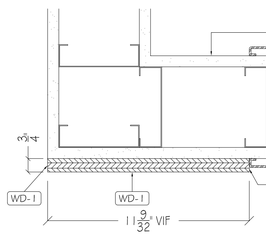

7 HORIZONTAL SECTION
SCALE: 3" = 1'-0"
REF: N/A

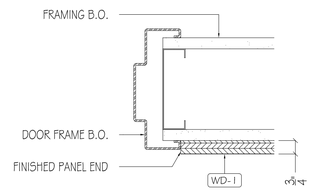

8 HORIZONTAL SECTION
SCALE: 3" = 1'-0"
REF: N/A

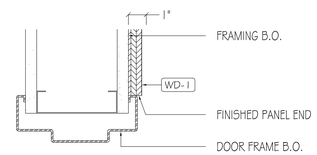

9 VERTICAL SECTION
SCALE: 3" = 1'-0"
REF: N/A

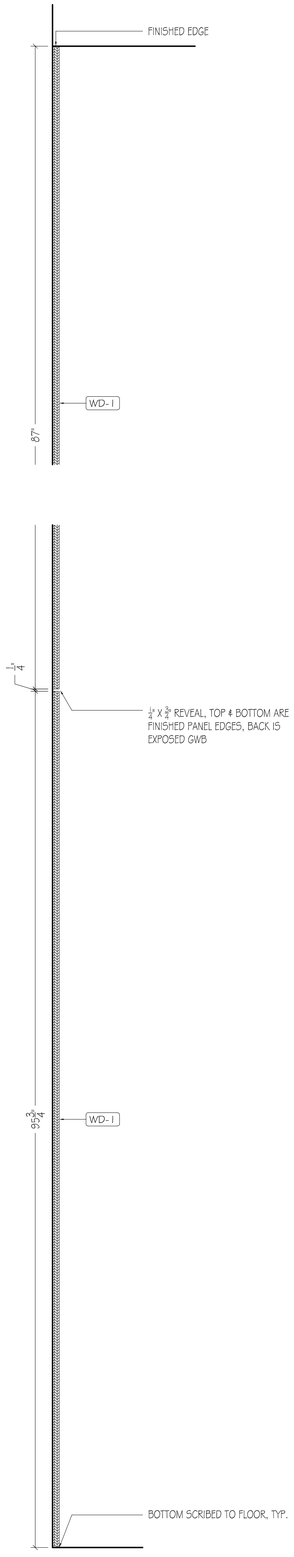

4 VERTICAL SECTION
SCALE: 1-1/2" = 1'-0"
REF: N/A

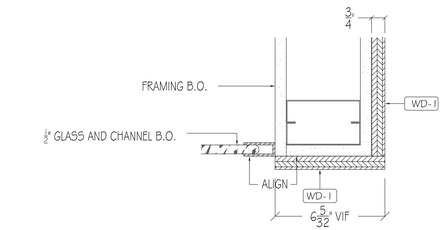

11 HORIZONTAL SECTION
SCALE: 3" = 1'-0"
REF: N/A

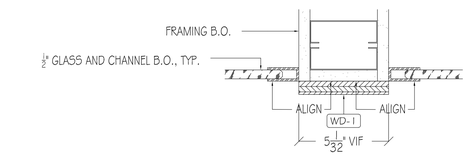

10 HORIZONTAL SECTION
SCALE: 3" = 1'-0"
REF: N/A

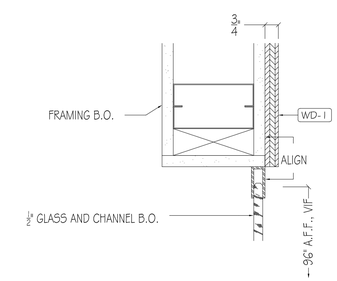

6 VERTICAL SECTION
SCALE: 3" = 1'-0"
REF: G1A/A-290.00

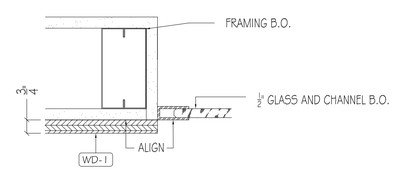

5 HORIZONTAL SECTION
SCALE: 3" = 1'-0"
REF: G1A/A-290.00

CONTINUED FROM WP-3.2

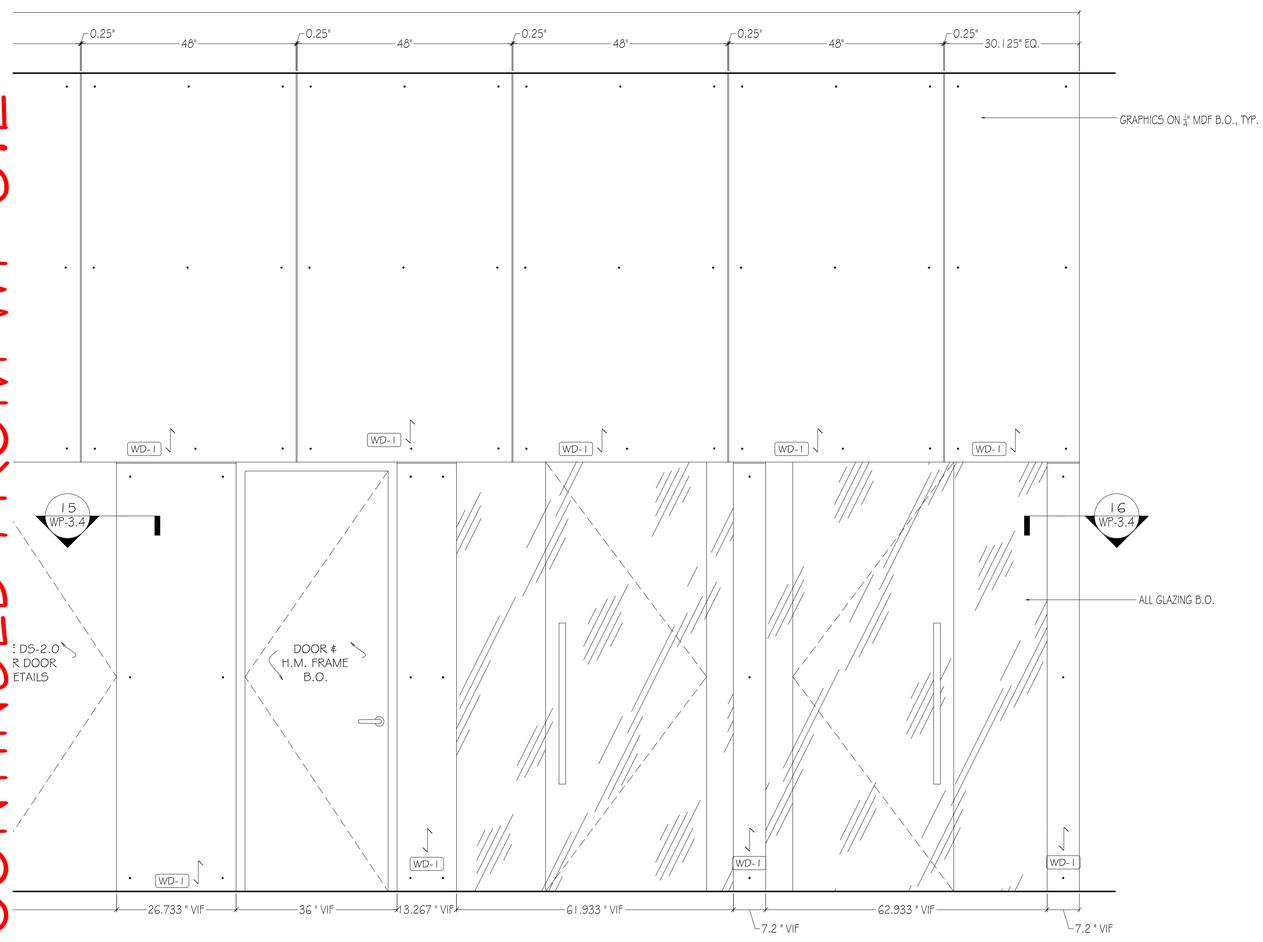

PLASTIC LAMINATE

PL-1	ROBIN REIGI #33516 CANYON HOLZFAELLER OAK
PL-2	PIONITE #F5593 ANGEL WHITE, SUEDE FINISH
PL-3	PIONITE #5E101 BLACK, SUEDE FINISH
PL-4	PIONITE #5G228 SLATE, SUEDE FINISH
PL-5	FORMICA DECOMETAL #M21178-89 BRUSHED STAINLESS STEEL

WOOD, VENEER, MELAMINE

WD-1	ANDERSON PLYWOOD, 3/4" THK. PHENOLIC BIRCH VENEER 13 PLY PLYWOOD, NATURAL FINISH
WD-2	
WD-3	
WD-4	
PF-1	
WB-1	SHOP PRIMED, FINAL PAINT B.O.
ML-1	WHITE MELAMINE
ML-2	BLACK MELAMINE
PRIMB	SHOP PRIMED, FINAL PAINT B.O.

SOLID SURFACE, STONE, METAL GLASS

SS-1	CEASARSTONE #2003 CONCRETE, 3/4" THK. SQUARE EDGE DETAIL BY OTHERS
SS-2	CEASARSTONE #4004 RAW CONCRETE, 3/4" THK. SQUARE EDGE DETAIL BY OTHERS
ST-1	
ST-2	
MT-1	1/8" X 2" X 2" STEEL TUBE, PAINTED BLACK
MT-2	
GL-1	
GL-2	

HARDAWARE

H-1	HINGES: BLUM CLIP TOP 110° CONCEALED HINGES, SELF CLOSING, SOFT CLOSE
H-2	DRAWER SLIDES: RICHELIEU #38322G24, FULL EXTENSION, 24", SOFT CLOSE
H-3	SHELF PINS: RICHELIEU #12352180, NICKLE FINISH
H-4	CAM LOCK
H-5	Z-CLIP: MONARCH METAL FABRICATION #MF375
H-6	CLOSET ROD: RICHELIEU #12220B140, 1 1/2" DIA. CHROME FINISH
H-7	CLOSET ROD FLANGE: RICHELIEU # 87641141410, 1 3/4" DIA. CHROME FINISH
H-8	CENTERLINE STD. GRANITE COUNTERTOP SUPPORT BRACKET 15" LENGTH
H-9	STEEL OUTRIGGER
H-10	3/8" x 1 1/2" X 1 1/2" ALUMINUM ANGLE
H-11	CAM LOCK
H-12	4" BLACK METAL GROMMET
H-13	

MISCELLANEOUS

UP-1	
M-1	
M-2	
M-3	

CONSTRUCTION SPECIFICATIONS

- ☐ LEED
- ☐ FSC
- ☐ QCP
- ☒ A.W.I.- PREMIUM GRADE
- ☐ A.W.I.- CUSTUM GRADE
- ☐ A.W.I.- ECONOMY GRADE

ELEVATOR DIMENSIONS	
HEIGHT	
WIDTH	
DEPTH	
DOOR HEIGHT	
DOOR WIDTH	

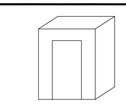

☒ PRELIMINARY DRAWING FOR APPROVAL- ALL DIMENSIONS TO BE VERIFIED

☐ FINAL DRAWING- DIMENSION VERIFIED APPROVED FOR CONSTRUCTION

#	DATE	REVISION
8		
7		
6		
5		
4		
3		
2		
1	10-21-17	REVISED PER ARCHITECTURAL RED LINES

DRAWING SET REFERENCE	DRAWINGS DATED:		JOB #: 4180
TITLE	CORRIDOR 4313		
JOB	RAUXA - 43RD & 44TH FLOORS		
LOCATION	225 LIBERTY STREET NEW YORK, NY		
GENERAL CONTRACTOR	HOLT CONSTRUCTION CORPORATION		DWG #: WP-3.3
ARCHITECT	SPECTORGROUP		
FILE: 4180-Rauxa 43rd 44th Floors-Master-03-01.dwg	BY: D.G.R. M.G.	DATE: 9-19-17	

INSTALLATION NOTE:
ALL PANELS TO BE FACE SCREWED TO WALL.

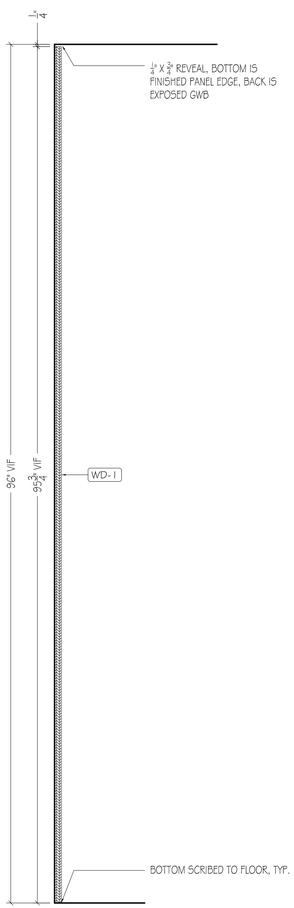

12 VERTICAL SECTION
SCALE: 1-1/2" = 1'-0"
REF: N/A

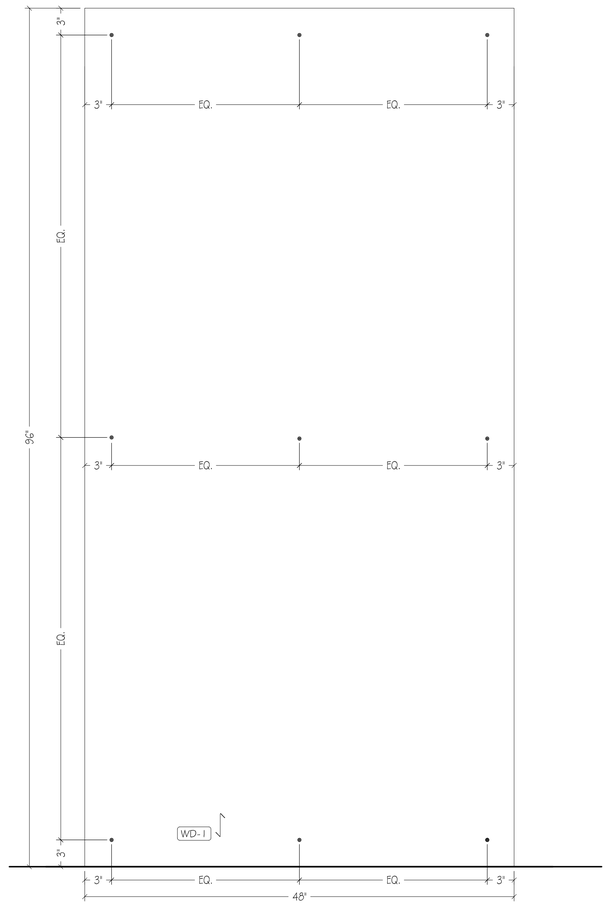

17 ELEVATION: SCREW PATTERN TYP.
SCALE: 1 1/2" = 1'-0"
REF: N/A

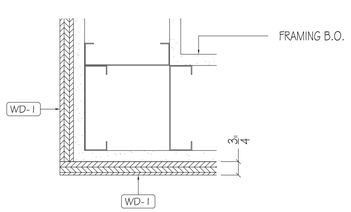

13 HORIZONTAL SECTION
SCALE: 3" = 1'-0"
REF: N/A

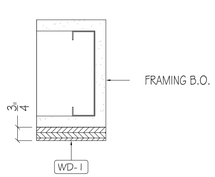

14 HORIZONTAL SECTION
SCALE: 3" = 1'-0"
REF: N/A

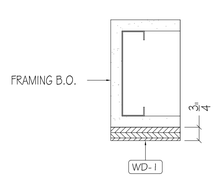

15 HORIZONTAL SECTION
SCALE: 3" = 1'-0"
REF: N/A

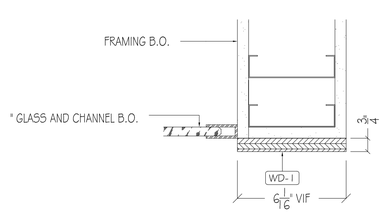

16 HORIZONTAL SECTION
SCALE: 3" = 1'-0"
REF: N/A

PLASTIC LAMINATE

PL-1	ROBIN REIGI #33516 CANYON HOLZTAELLER OAK.
PL-2	PIONITE #F5593 ANGEL WHITE, SUEDE FINISH
PL-3	PIONITE #SE101 BLACK, SUEDE FINISH
PL-4	PIONITE #SG228 SLATE, SUEDE FINISH
PL-5	FORMICA DECOMETAL #M2178-99 BRUSHED STAINLESS STEEL

WOOD, VENEER, MELAMINE

WD-1	ANDERSON PLYWOOD, 3/4" THK. PHENOLIC BIRCH VENEER 13 PLY PLYWOOD, NATURAL FINISH
WD-2	
WD-3	
WD-4	
PF-1	
WB-1	SHOP PRIMED, FINAL PAINT B.O.
ML-1	WHITE MELAMINE
ML-2	BLACK MELAMINE
PRIMB	SHOP PRIMED, FINAL PAINT B.O.

SOLID SURFACE, STONE, METAL GLASS

SS-1	CEASARSTONE #2003 CONCRETE, 3/4" THK. SQUARE EDGE DETAIL BY OTHERS
SS-2	CEASARSTONE #4004 RAW CONCRETE, 3/4" THK. SQUARE EDGE DETAIL BY OTHERS
ST-1	
ST-2	
MT-1	3/4" X 2" X 2" STEEL TUBE, PAINTED BLACK
MT-2	
GL-1	
GL-2	

HARDAWARE

H-1	HINGES: BLUM CLIP TOP 110° CONCEALED HINGES, SELF CLOSING, SOFT CLOSE
H-2	DRAWER SLIDES: RICHELIEU #38322G24, FULL EXTENSION, 24", SOFT CLOSE
H-3	SHELF PINS: RICHELIEU #12352180, NICKLE FINISH
H-4	CAM LOCK
H-5	Z-CLIP: MONARCH METAL FABRICATION #MF375
H-6	CLOSET ROD: RICHELIEU #122208140, 1 1/4" DIA, CHROME FINISH
H-7	CLOSET ROD FLANGE: RICHELIEU # 87641114140, 1 1/4" DIA. CHROME FINISH
H-8	CENTERLINE STD. GRANITE COUNTERTOP SUPPORT BRACKET 15" LENGTH
H-9	STEEL OUTRIGGER
H-10	3/4" x 1 1/2" X 1 1/2" ALUMINUM ANGLE
H-11	CAM LOCK
H-12	4" BLACK METAL GROMMET
H-13	

MISCELLANEOUS

UP-1	
M-1	
M-2	
M-3	

CONSTRUCTION SPECIFICATIONS

- ☐ LEED
- ☐ FSC
- ☐ QCP
- ☒ A.W.I.- PREMIUM GRADE
- ☐ A.W.I.- CUSTUM GRADE
- ☐ A.W.I.- ECONOMY GRADE

ELEVATOR DIMENSIONS	
HEIGHT	
WIDTH	
DEPTH	
DOOR HEIGHT	
DOOR WIDTH	

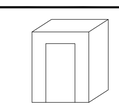

☒ PRELIMINARY DRAWING FOR APPROVAL- ALL DIMENSIONS TO BE VERIFIED

☐ FINAL DRAWING- DIMENSION VERIFIED APPROVED FOR CONSTRUCTION

#	DATE	REVISION
8		
7		
6		
5		
4		
3		
2		
1	10-21-17	REVISED PER ARCHITECTURAL RED LINES

DRAWING SET REFERENCE	DRAWINGS DATED:	JOB #: 4180
TITLE	CORRIDOR 4313	
JOB	RALIXA - 43RD & 44TH FLOORS	
LOCATION	225 LIBERTY STREET NEW YORK, NY	
GENERAL CONTRACTOR	HOLT CONSTRUCTION CORPORATION	DWG #: WP-3.4
ARCHITECT	SPECTORGROUP	
FILE: 4-50-Raxa-43rd 44th Floors-Wbooks - 10.20.17.dwg	BY: D.G.R. M.G.	DATE: 9-19-17

INSTALLATION NOTE:
ALL PANELS TO BE FACE SCREWED TO WALL.

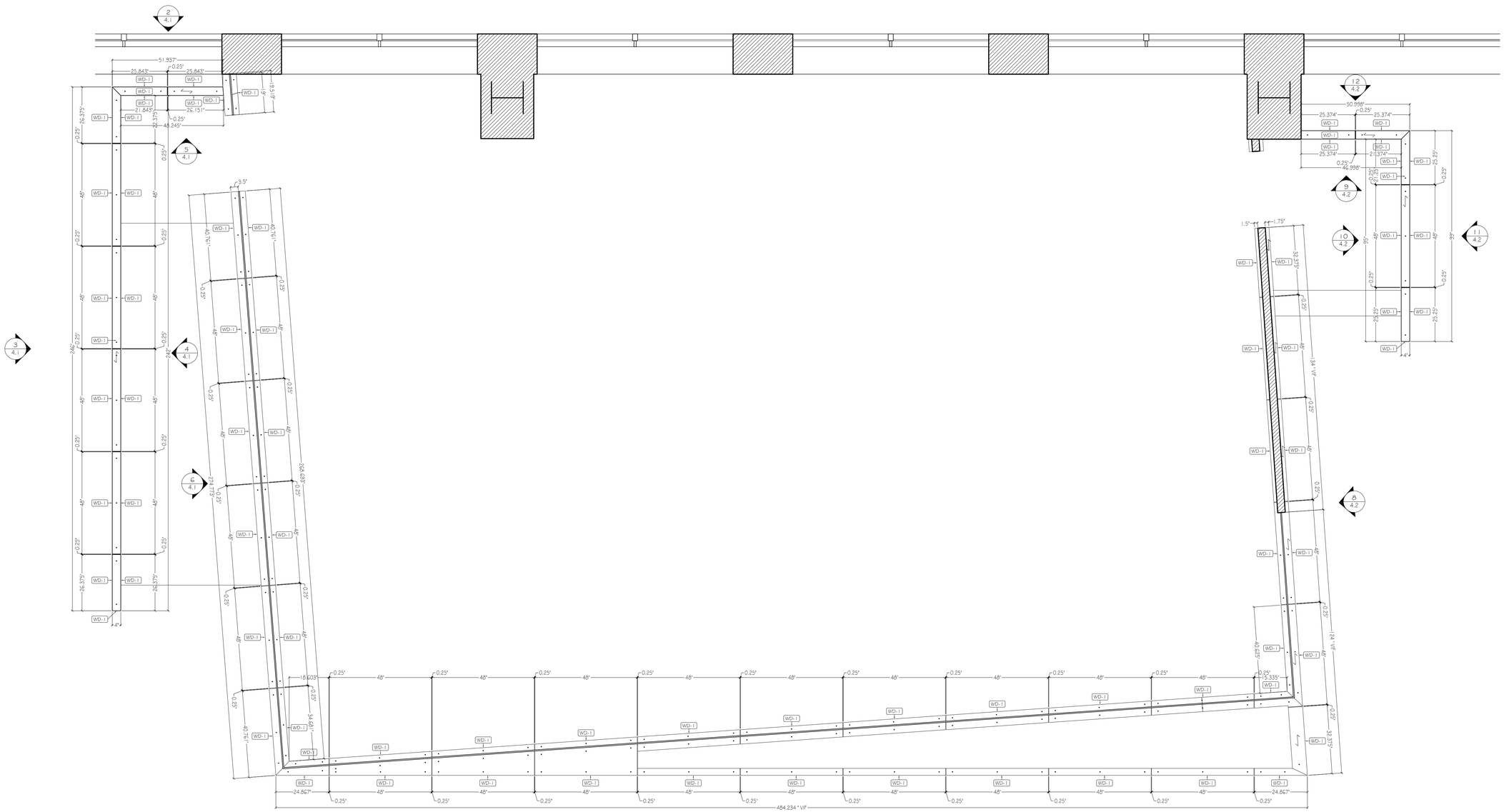

1 PLAN: BOARD ROOM 4312, PLATFORM STAIR 4317 & PLATFORM RAMP 4322
SCALE: 1/2" = 1'-0"
REF: 1/A-201.00

PLASTIC LAMINATE

PL-1	ROBIN REIGI #33516 CANYON HOLZFAELLER OAK
PL-2	PIONITE #F5593 ANGEL WHITE, SUEDE FINISH
PL-3	PIONITE #SE101 BLACK, SUEDE FINISH
PL-4	PIONITE #SG228 SLATE, SUEDE FINISH
PL-5	FORMICA DECOMETAL #M2178-99 BRUSHED STAINLESS STEEL

WOOD, VENEER, MELAMINE

WD-1	ANDERSON PLYWOOD, $\frac{3}{4}$" THK. PHENOLIC BIRCH VENEER 13 PLY PLYWOOD, NATURAL FINISH
WD-2	
WD-3	
WD-4	
PF-1	
WB-1	SHOP PRIMED, FINAL PAINT B.O.
ML-1	WHITE MELAMINE
ML-2	BLACK MELAMINE
PRIMB	SHOP PRIMED, FINAL PAINT B.O.

SOLID SURFACE, STONE, METAL GLASS

SS-1	CEASARSTONE #2003 CONCRETE, $\frac{3}{4}$" THK. SQUARE EDGE DETAIL BY OTHERS
SS-2	CEASARSTONE #4004 RAW CONCRETE, $\frac{3}{4}$" THK. SQUARE EDGE DETAIL BY OTHERS
ST-1	
ST-2	
MT-1	$\frac{3}{4}$" X 2" X 2" STEEL TUBE, PAINTED BLACK
MT-2	
GL-1	
GL-2	

HARDAWARE

H-1	HINGES: BLUM CLIP TOP 110° CONCEALED HINGES, SELF CLOSING, SOFT CLOSE
H-2	DRAWER SLIDES: RICHELIEU #38322G24, FULL EXTENSION, 24", SOFT CLOSE
H-3	SHELF PINS: RICHELIEU #12352180, NICKLE FINISH
H-4	CAM LOCK
H-5	Z-CLIP: MONARCH METAL FABRICATION #MF375
H-6	CLOSET ROD: RICHELIEU #12220B140, 1 $\frac{1}{4}$" DIA, CHROME FINISH
H-7	CLOSET ROD FLANGE: RICHELIEU # 8764114140, 1 $\frac{1}{4}$" DIA. CHROME FINISH
H-8	CENTERLINE STD. GRANITE COUNTERTOP SUPPORT BRACKET 15" LENGTH
H-9	STEEL OUTRIGGER
H-10	$\frac{1}{4}$" x 1 $\frac{1}{2}$" X 1 $\frac{1}{2}$" ALUMINUM ANGLE
H-11	CAM LOCK
H-12	4" BLACK METAL GROMMET
H-13	

MISCELLANEOUS

UP-1	
M-1	
M-2	
M-3	

CONSTRUCTION SPECIFICATIONS

- ☐ LEED
- ☐ FSC
- ☐ GCP
- ☒ A.W.I.- PREMIUM GRADE
- ☐ A.W.I.- CUSTUM GRADE
- ☐ A.W.I.- ECONOMY GRADE

ELEVATOR DIMENSIONS

HEIGHT	
WIDTH	
DEPTH	
DOOR HEIGHT	
DOOR WIDTH	

☒ PRELIMINARY DRAWING FOR APPROVAL- ALL DIMENSIONS TO BE VERIFIED

☐ FINAL DRAWING- DIMENSION VERIFIED APPROVED FOR CONSTRUCTION

#	DATE	REVISION
8		
7		
6		
5		
4		
3		
2		
1	10-21-17	REVISED PER ARCHITECTURAL RED LINES

DRAWING SET REFFRENCE	DRAWINGS DATED:	JOB #: 4180
TITLE	PLATFORM STAIR 4317, BOARD ROOM 4318 & PLATFORM RAMP 4322	
JOB	RALIXA - 43RD & 44TH FLOORS	
LOCATION	225 LIBERTY STREET NEW YORK, NY	
GENERAL CONTRACTOR	HOLT CONSTRUCTION CORPORATION	DWG #: WP-4.0
ARCHITECT	SPECTORGROUP	
FILE: 4-RD-Ralixa-43rd-44th Floors - Wilson - 0.03-17.dwg	BY: D.G.R. M.G.	DATE: 9-19-17

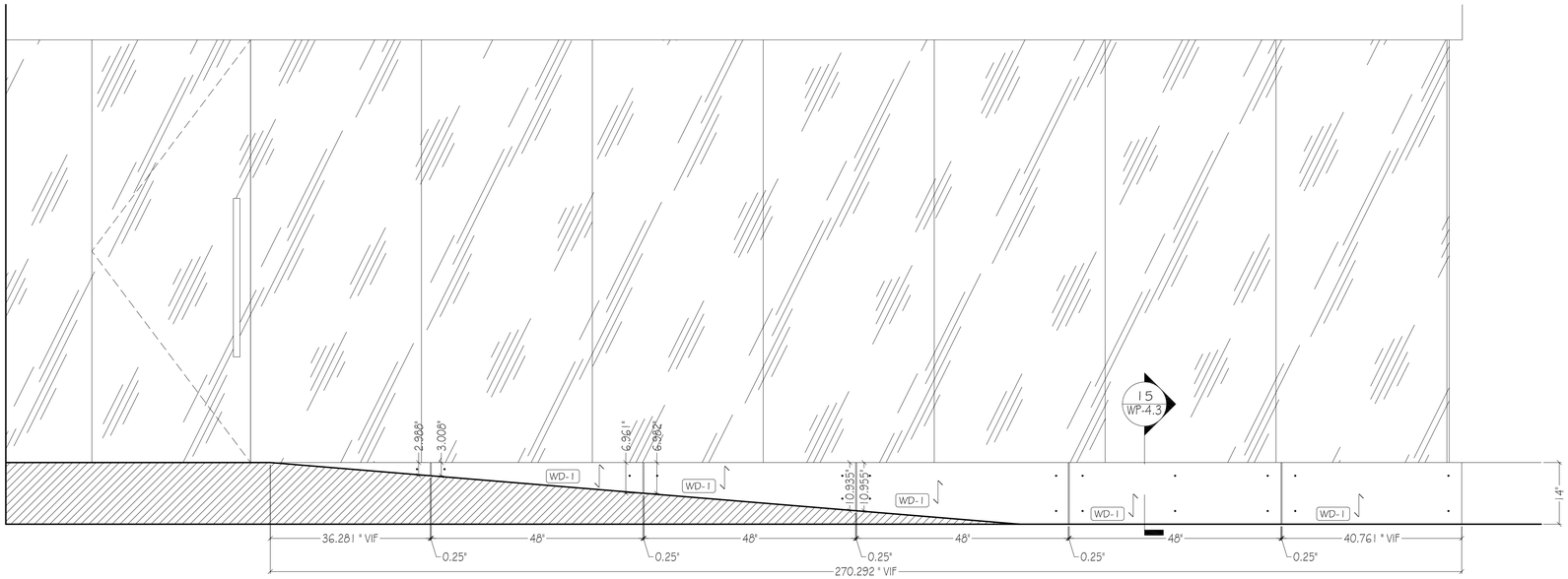

6 ELEVATION: BOARD ROOM 4312
SCALE: 3/4" = 1'-0"
REF: 9/A-600.00

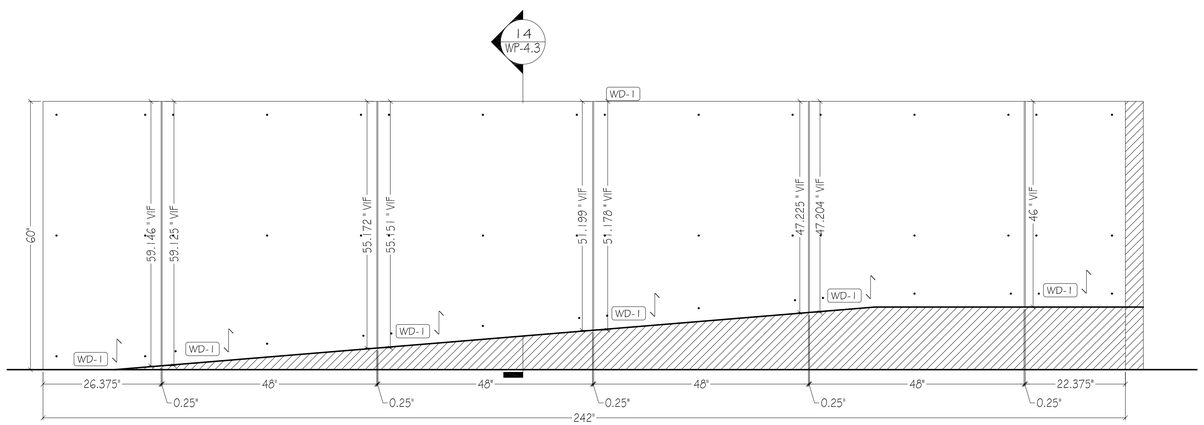

4 ELEVATION: PLATFORM RAMP 4322
SCALE: 3/4" = 1'-0"
REF: N/A

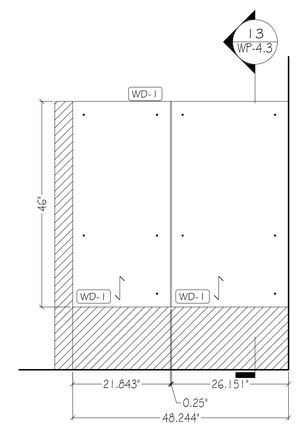

5 ELEVATION: PLATFORM RAMP 4322
SCALE: 3/4" = 1'-0"
REF: 9/A-600.00

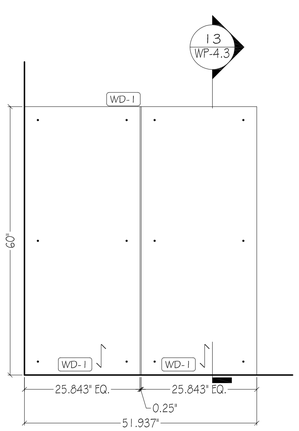

2 ELEVATION: PLATFORM RAMP 4322
SCALE: 3/4" = 1'-0"
REF: N/A

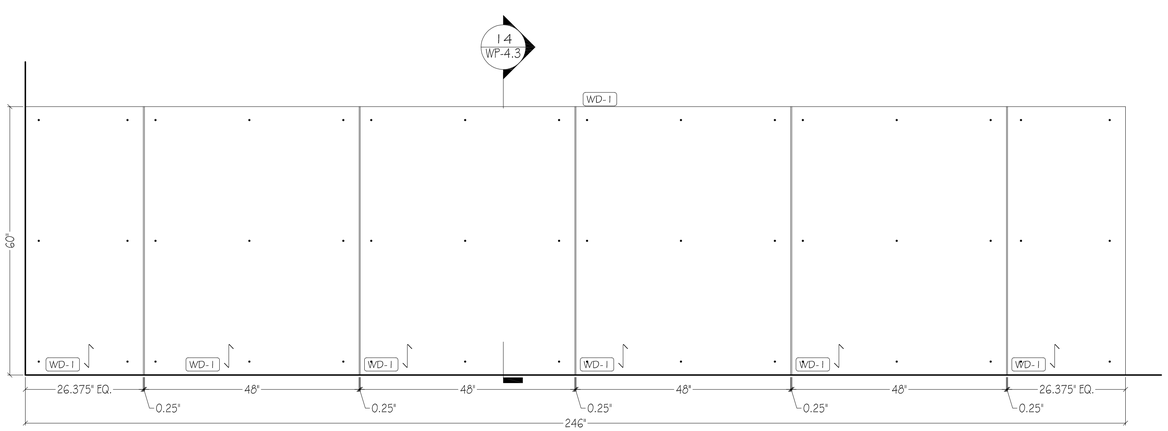

3 ELEVATION: PLATFORM RAMP 4322
SCALE: 3/4" = 1'-0"
REF: 9/A-600.00

INSTALLATION NOTE:
ALL PANELS TO BE FACE SCREWED TO WALL.

PLASTIC LAMINATE

PL-1	ROBIN REIGI #33516 CANYON HOLZFAELLER OAK.
PL-2	PIONITE #F5593 ANGEL WHITE, SUEDE FINISH
PL-3	PIONITE #SE101 BLACK, SUEDE FINISH
PL-4	PIONITE #SG228 SLATE, SUEDE FINISH
PL-5	FORMICA DECOMETAL #M2178-99 BRUSHED STAINLESS STEEL

WOOD, VENEER, MELAMINE

WD-1	ANDERSON PLYWOOD, $\frac{3}{4}$" THK. PHENOLIC BIRCH VENEER 13 PLY PLYWOOD, NATURAL FINISH
WD-2	
WD-3	
WD-4	
PF-1	
WB-1	SHOP PRIMED, FINAL PAINT B.O.
ML-1	WHITE MELAMINE
ML-2	BLACK MELAMINE
PRIMB	SHOP PRIMED, FINAL PAINT B.O.

SOLID SURFACE, STONE, METAL GLASS

SS-1	CEASARSTONE #2003 CONCRETE, $\frac{3}{4}$" THK. SQUARE EDGE DETAIL BY OTHERS
SS-2	CEASARSTONE #4004 RAW CONCRETE, $\frac{3}{4}$" THK. SQUARE EDGE DETAIL BY OTHERS
ST-1	
ST-2	
MT-1	$\frac{3}{4}$" X 2" X 2" STEEL TUBE, PAINTED BLACK
MT-2	
GL-1	
GL-2	

HARDAWARE

H-1	HINGES: BLUM CLIP TOP 110° CONCEALED HINGES, SELF CLOSING, SOFT CLOSE
H-2	DRAWER SLIDES: RICHELIEU #38322G24, FULL EXTENSION, 24", SOFT CLOSE
H-3	SHELF PINS: RICHELIEU #12352180, NICKLE FINISH
H-4	CAM LOCK
H-5	Z-CLIP: MONARCH METAL FABRICATION #MF375
H-6	CLOSET ROD: RICHELIEU #12220B140, 1 $\frac{1}{4}$" DIA, CHROME FINISH
H-7	CLOSET ROD FLANGE: RICHELIEU # 8764114140, 1 $\frac{1}{4}$" DIA. CHROME FINISH
H-8	CENTERLINE STD. GRANITE COUNTERTOP SUPPORT BRACKET 15" LENGTH
H-9	STEEL OUTRIGGER
H-10	$\frac{3}{8}$" x 1 $\frac{1}{2}$" X 1 $\frac{1}{2}$" ALUMINUM ANGLE
H-11	CAM LOCK
H-12	4" BLACK METAL GROMMET
H-13	

MISCELLANEOUS

UP-1	
M-1	
M-2	
M-3	

CONSTRUCTION SPECIFICATIONS

- ☐ LEED
- ☐ FSC
- ☐ QCP
- ☒ A.W.I.- PREMIUM GRADE
- ☐ A.W.I.- CUSTUM GRADE
- ☐ A.W.I.- ECONOMY GRADE

ELEVATOR DIMENSIONS	
HEIGHT	
WIDTH	
DEPTH	
DOOR HEIGHT	
DOOR WIDTH	

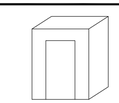

☒ PRELIMINARY DRAWING FOR APPROVAL- ALL DIMENSIONS TO BE VERIFIED

☐ FINAL DRAWING- DIMENSION VERIFIED APPROVED FOR CONSTRUCTION

#	DATE	REVISION
8		
7		
6		
5		
4		
3		
2		
1	10-21-17	REVISED PER ARCHITECTURAL RED LINES

DRAWING SET REFERENCE	DRAWINGS DATED:	JOB #: 4180
TITLE	PLATFORM STAIR 4317, BOARD ROOM 4318 & PLATFORM RAMP 4322	
JOB	RALIXA - 43RD & 44TH FLOORS	
LOCATION	225 LIBERTY STREET NEW YORK, NY	
GENERAL CONTRACTOR	HOLT CONSTRUCTION CORPORATION	DWG #: WP-4.1
ARCHITECT	SPECTORGROUP	
FILE: 4-RS-Base-43rd 44th Floors-Wheels-17.03.17.dwg	BY: D.G.R. M.G.	DATE: 9-19-17

INSTALLATION NOTE:
ALL PANELS TO BE FACE SCREWED TO WALL.

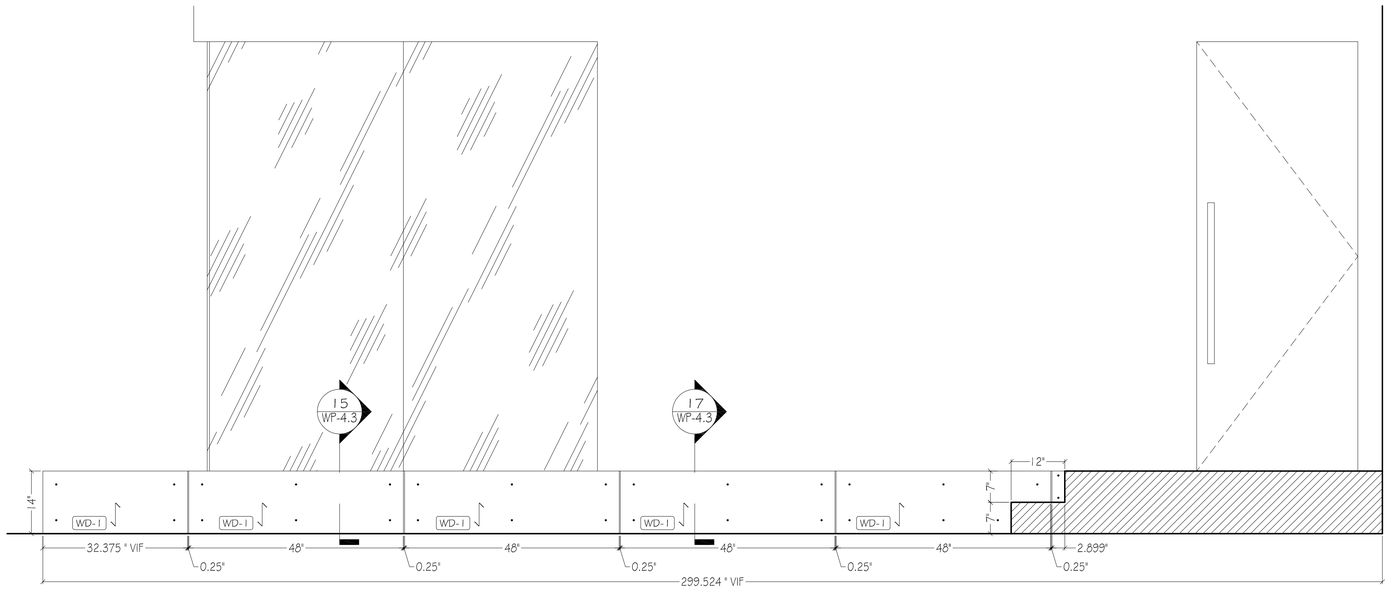

8 ELEVATION: BOARDROOM 4312
SCALE: 3/4" = 1'-0"
REF: 7/A-600.00

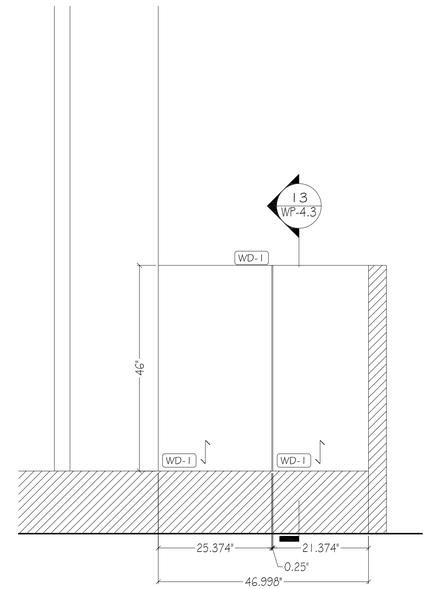

9 ELEVATION: PLATFORM STAIR 4317
SCALE: 3/4" = 1'-0"
REF: 8/A-600.00

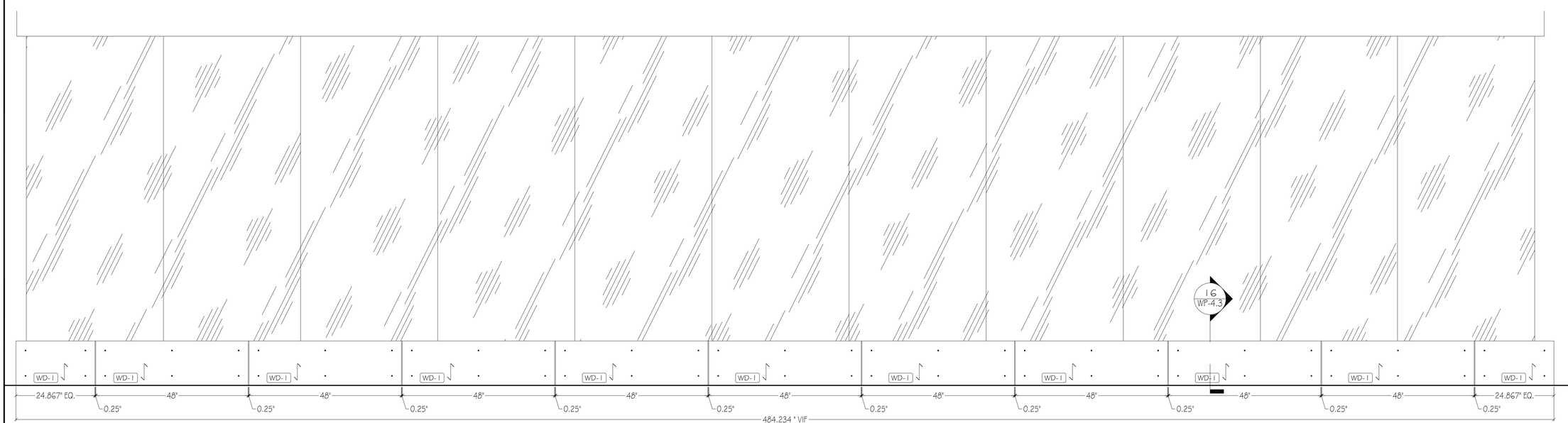

7 ELEVATION: BOARDROOM 4312
SCALE: 3/4" = 1'-0"
REF: 8/A-600.00

PLASTIC LAMINATE

PL-1	ROBIN REIGI #33516 CANYON HOLZFAELLER OAK
PL-2	PIONITE #F5593 ANGEL WHITE, SUEDE FINISH
PL-3	PIONITE #SE101 BLACK, SUEDE FINISH
PL-4	PIONITE #SG228 SLATE, SUEDE FINISH
PL-5	FORMICA DECOMETAL #M2178-99 BRUSHED STAINLESS STEEL

WOOD, VENEER, MELAMINE

WD-1	ANDERSON PLYWOOD, $\frac{3}{4}$" THK. PHENOLIC BIRCH VENEER 13 PLY PLYWOOD, NATURAL FINISH
WD-2	
WD-3	
WD-4	
PF-1	
WB-1	SHOP PRIMED, FINAL PAINT B.O.
ML-1	WHITE MELAMINE
ML-2	BLACK MELAMINE
PRIMB	SHOP PRIMED, FINAL PAINT B.O.

SOLID SURFACE, STONE, METAL GLASS

SS-1	CEASARSTONE #2003 CONCRETE, $\frac{3}{4}$" THK. SQUARE EDGE DETAIL BY OTHERS
SS-2	CEASARSTONE #4004 RAW CONCRETE, $\frac{3}{4}$" THK. SQUARE EDGE DETAIL BY OTHERS
ST-1	
ST-2	
MT-1	$\frac{3}{4}$" X 2" X 2" STEEL TUBE, PAINTED BLACK
MT-2	
GL-1	
GL-2	

HARDAWARE

H-1	HINGES: BLUM CLIP TOP 110° CONCEALED HINGES, SELF CLOSING, SOFT CLOSE
H-2	DRAWER SLIDES: RICHELIEU #38322G24, FULL EXTENSION, 24", SOFT CLOSE
H-3	SHELF PINS: RICHELIEU #12352180, NICKLE FINISH
H-4	CAM LOCK
H-5	Z-CLIP: MONARCH METAL FABRICATION #MF375
H-6	CLOSET ROD: RICHELIEU #12220B140, 1 $\frac{1}{4}$" DIA, CHROME FINISH
H-7	CLOSET ROD FLANGE: RICHELIEU # 8764114140, 1 $\frac{1}{4}$" DIA. CHROME FINISH
H-8	CENTERLINE STD. GRANITE COUNTERTOP SUPPORT BRACKET 15" LENGTH
H-9	STEEL OUTRIGGER
H-10	$\frac{1}{4}$" x 1 $\frac{1}{2}$" X 1 $\frac{1}{2}$" ALUMINUM ANGLE
H-11	CAM LOCK
H-12	4" BLACK METAL GROMMET
H-13	

MISCELLANEOUS

UP-1	
M-1	
M-2	
M-3	

CONSTRUCTION SPECIFICATIONS

- ☐ LEED
- ☐ FSC
- ☐ GCP
- ☒ A.W.I.- PREMIUM GRADE
- ☐ A.W.I.- CUSTUM GRADE
- ☐ A.W.I.- ECONOMY GRADE

ELEVATOR DIMENSIONS	
HEIGHT	
WIDTH	
DEPTH	
DOOR HEIGHT	
DOOR WIDTH	

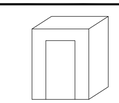

☒ PRELIMINARY DRAWING FOR APPROVAL- ALL DIMENSIONS TO BE VERIFIED

☐ FINAL DRAWING- DIMENSION VERIFIED APPROVED FOR CONSTRUCTION

#	DATE	REVISION
8		
7		
6		
5		
4		
3		
2		
1	10-21-17	REVISED PER ARCHITECTURAL RED LINES

DRAWING SET REFERENCE	DRAWINGS DATED:	JOB #: 4180
TITLE	PLATFORM STAIR 4317, BOARD ROOM 4318 & PLATFORM RAMP 4322	
JOB	RALIXA - 43RD & 44TH FLOORS	
LOCATION	225 LIBERTY STREET NEW YORK, NY	
GENERAL CONTRACTOR	HOLT CONSTRUCTION CORPORATION	DWG #: WP-4.2
ARCHITECT	SPECTORGROUP	
FILE: 4-B3-Ralix-43rd-44th Floors-Models-17-03-17.dwg	BY: D.G.R. M.G.	DATE: 9-19-17

INSTALLATION NOTE:
ALL PANELS TO BE FACE SCREWED TO WALL.

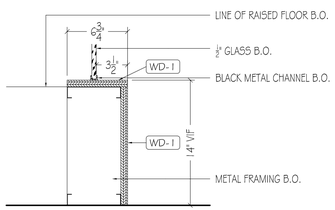

15 VERTICAL SECTION
SCALE: 1-1/2" = 1'-0"
REF: G2/A-290.00

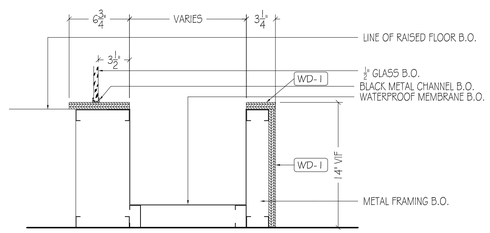

16 VERTICAL SECTION
SCALE: 1-1/2" = 1'-0"
REF: A-801

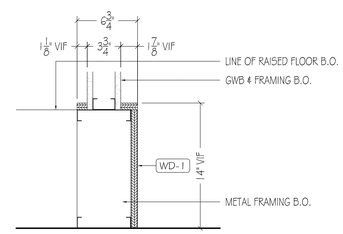

17 VERTICAL SECTION
SCALE: 1-1/2" = 1'-0"
REF: G2/A-290.00

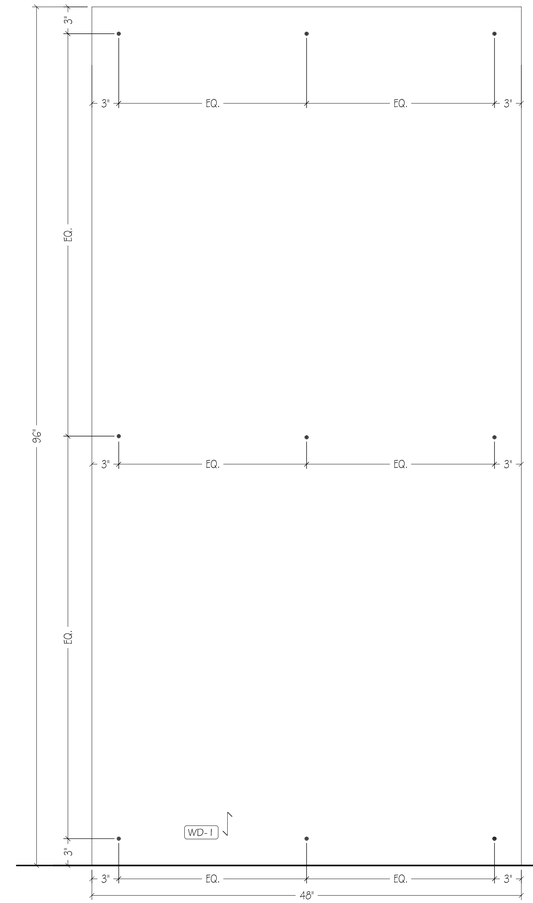

17 ELEVATION: SCREW PATTERN TYP.
SCALE: 1 1/2" = 1'-0"
REF: NA

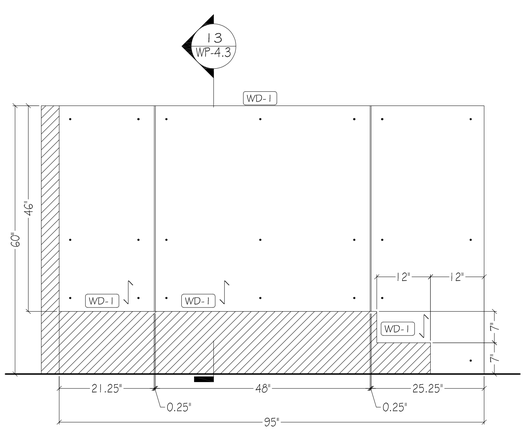

10 ELEVATION: PLATFORM STAIR 4317
SCALE: 3/4" = 1'-0"
REF: N/A

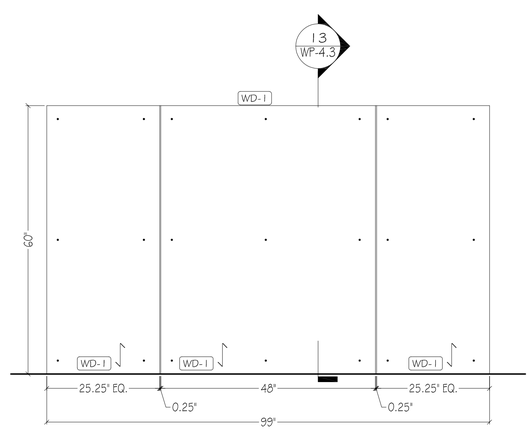

11 ELEVATION: PLATFORM STAIR 4317
SCALE: 3/4" = 1'-0"
REF: 7/A-600.00

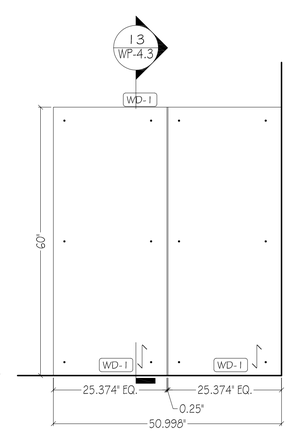

12 ELEVATION: PLATFORM STAIR 4317
SCALE: 3/4" = 1'-0"
REF: N/A

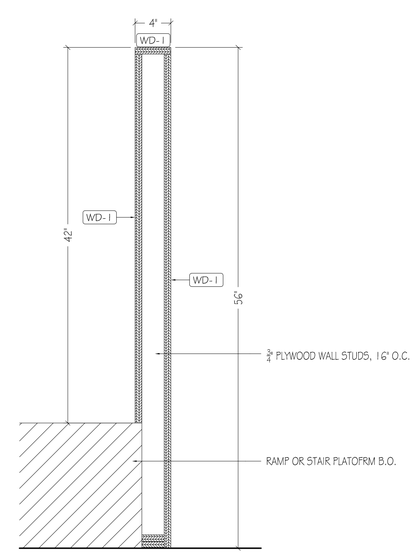

13 VERTICAL SECTION
SCALE: 1-1/2" = 1'-0"
REF: N/A

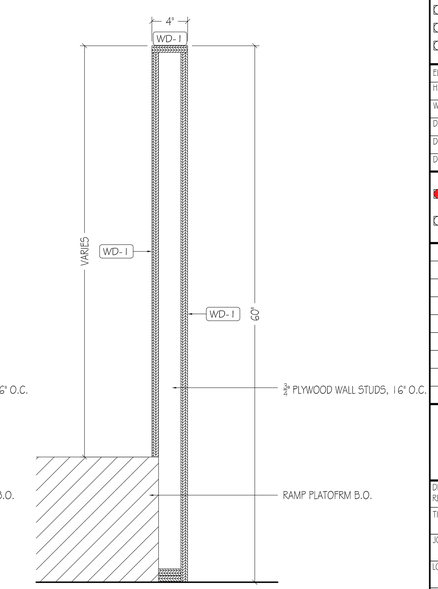

14 VERTICAL SECTION
SCALE: 1-1/2" = 1'-0"
REF: N/A

PLASTIC LAMINATE

PL-1	ROBIN REIGI #33516 CANYON HOLZFAELLER OAK.
PL-2	PIONITE #F5593 ANGEL WHITE, SUEDE FINISH
PL-3	PIONITE #SE101 BLACK, SUEDE FINISH
PL-4	PIONITE #SG228 SLATE, SUEDE FINISH
PL-5	FORMICA DECOMETAL #M2178-99 BRUSHED STAINLESS STEEL

WOOD, VENEER, MELAMINE

WD-1	ANDERSON PLYWOOD, 3/4" THK. PHENOLIC BIRCH VENEER 13 PLY PLYWOOD, NATURAL FINISH
WD-2	
WD-3	
WD-4	
PF-1	
WB-1	SHOP PRIMED, FINAL PAINT B.O.
ML-1	WHITE MELAMINE
ML-2	BLACK MELAMINE
PRIMB	SHOP PRIMED, FINAL PAINT B.O.

SOLID SURFACE, STONE, METAL GLASS

SS-1	CEASARSTONE #2003 CONCRETE, 3/4" THK. SQUARE EDGE DETAIL BY OTHERS
SS-2	CEASARSTONE #4004 RAW CONCRETE, 3/4" THK. SQUARE EDGE DETAIL BY OTHERS
ST-1	
ST-2	
MT-1	3/4" X 2" X 2" STEEL TUBE, PAINTED BLACK
MT-2	
GL-1	
GL-2	

HARDAWARE

H-1	HINGES: BLUM CLIP TOP 110° CONCEALED HINGES, SELF CLOSING, SOFT CLOSE
H-2	DRAWER SLIDES: RICHELIEU #38322G24, FULL EXTENSION, 24", SOFT CLOSE
H-3	SHELF PINS: RICHELIEU #12352180, NICKLE FINISH
H-4	CAM LOCK
H-5	Z-CLIP: MONARCH METAL FABRICATION #MF375
H-6	CLOSET ROD: RICHELIEU #122208140, 1 1/4" DIA, CHROME FINISH
H-7	CLOSET ROD FLANGE: RICHELIEU # 87641141140, 1 1/4" DIA. CHROME FINISH
H-8	CENTERLINE STD. GRANITE COUNTERTOP SUPPORT BRACKET 15" LENGTH
H-9	STEEL OUTRIGGER
H-10	3/8" x 1 1/2" X 1 1/2" ALUMINUM ANGLE
H-11	CAM LOCK
H-12	4" BLACK METAL GROMMET
H-13	

MISCELLANEOUS

UP-1	
M-1	
M-2	
M-3	

CONSTRUCTION SPECIFICATIONS

- ☐ LEED
- ☐ FSC
- ☐ QCP
- ☒ A.W.I.- PREMIUM GRADE
- ☐ A.W.I.- CUSTUM GRADE
- ☐ A.W.I.- ECONOMY GRADE

ELEVATOR DIMENSIONS	
HEIGHT	
WIDTH	
DEPTH	
DOOR HEIGHT	
DOOR WIDTH	

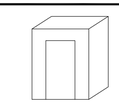

☒ PRELIMINARY DRAWING FOR APPROVAL- ALL DIMENSIONS TO BE VERIFIED

☐ FINAL DRAWING- DIMENSION VERIFIED APPROVED FOR CONSTRUCTION

#	DATE	REVISION
8		
7		
6		
5		
4		
3		
2		
1	10-21-17	REVISED PER ARCHITECTURAL RED LINES

DRAWING SET REFERENCE	DRAWINGS DATED:	JOB #: 4180
TITLE	PLATFORM STAIR 4317, BOARD ROOM 4318 & PLATFORM RAMP 4322	
JOB	RAUXA - 43RD & 44TH FLOORS	
LOCATION	225 LIBERTY STREET NEW YORK, NY	
GENERAL CONTRACTOR	HOLT CONSTRUCTION CORPORATION	DWG #: WP-4.3
ARCHITECT	SPECTORGROUP	
FILE: 4-RS-Rauxa-43rd-44th Floors - Wilson - 10.03.17.dwg	BY: D.G.R. M.G.	DATE: 9-19-17

INSTALLATION NOTE:
ALL PANELS TO BE FACE SCREWED TO WALL.

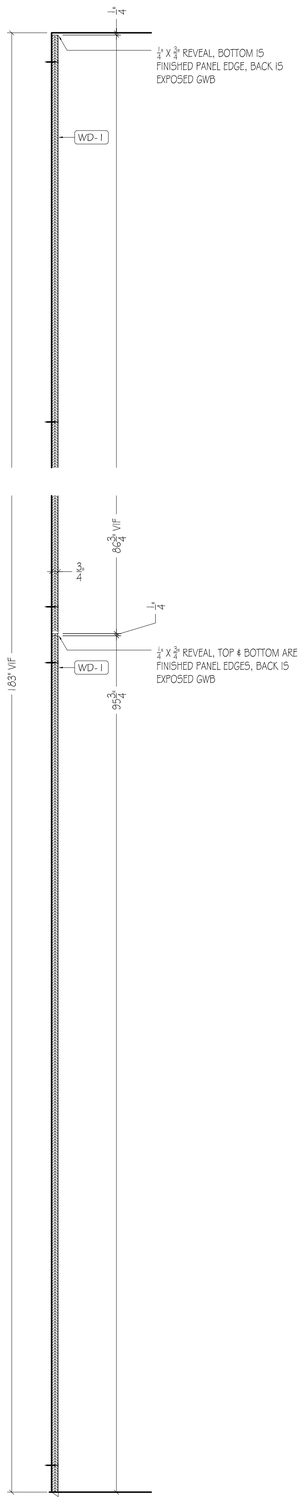

1 VERTICAL SECTION
SCALE: 1-1/2" = 1'-0"
REF: NA

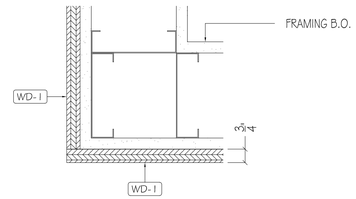

5 HORIZONTAL SECTION
SCALE: 3" = 1'-0"
REF: N/A

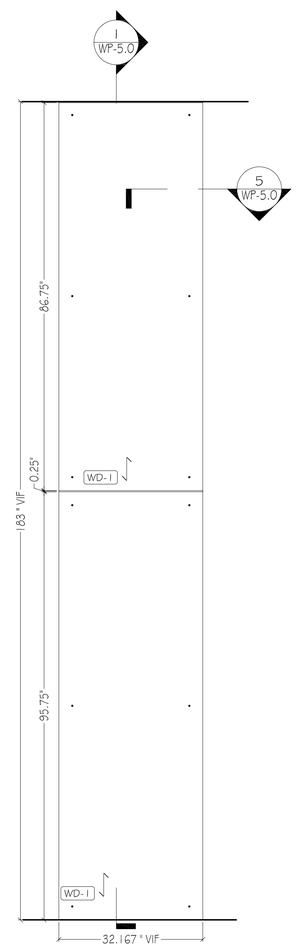

2 ELEVATION: LOUNGE/TOWN HALL 4305
SCALE: 3/4" = 1'-0"
REF: NA

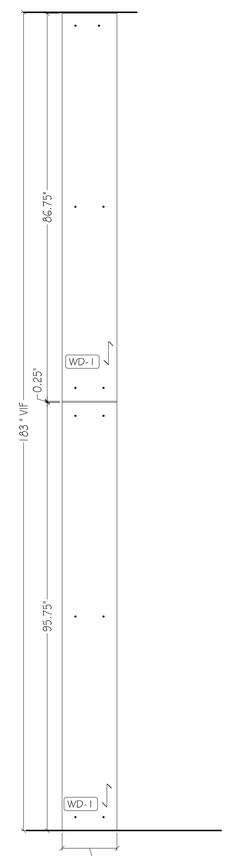

3 ELEVATION: LOUNGE/TOWN HALL 430
SCALE: 3/4" = 1'-0"
REF: NA

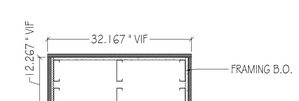

4 PLAN: LOUNGE/TOWN HALL 4305
SCALE: 3/4" = 1'-0"
REF: 1/A401.00

PLASTIC LAMINATE

PL-1	ROBIN REIGI #33516 CANYON HOLZFAELLER OAK
PL-2	PIONITE #F5593 ANGEL WHITE, SUEDE FINISH
PL-3	PIONITE #SE101 BLACK, SUEDE FINISH
PL-4	PIONITE #SG228 SLATE, SUEDE FINISH
PL-5	FORMICA DECOMETAL #M2178-99 BRUSHED STAINLESS STEEL

WOOD, VENEER, MELAMINE

WD-1	ANDERSON PLYWOOD, 3/4" THK. PHENOLIC BIRCH VENEER 13 PLY PLYWOOD, NATURAL FINISH
WD-2	
WD-3	
WD-4	
PF-1	
WB-1	SHOP PRIMED, FINAL PAINT B.O.
ML-1	WHITE MELAMINE
ML-2	BLACK MELAMINE
PRIMB	SHOP PRIMED, FINAL PAINT B.O.

SOLID SURFACE, STONE, METAL GLASS

SS-1	CEASARSTONE #2003 CONCRETE, 3/4" THK. SQUARE EDGE DETAIL BY OTHERS
SS-2	CEASARSTONE #4004 RAW CONCRETE, 3/4" THK. SQUARE EDGE DETAIL BY OTHERS
ST-1	
ST-2	
MT-1	3/4" X 2" X 2" STEEL TUBE, PAINTED BLACK
MT-2	
GL-1	
GL-2	

HARDAWARE

H-1	HINGES: BLUM CLIP TOP 110° CONCEALED HINGES, SELF CLOSING, SOFT CLOSE
H-2	DRAWER SLIDES: RICHELIEU #38322G24, FULL EXTENSION, 24", SOFT CLOSE
H-3	SHELF PINS: RICHELIEU #12352180, NICKLE FINISH
H-4	CAM LOCK
H-5	Z-CLIP: MONARCH METAL FABRICATION #MF375
H-6	CLOSET ROD: RICHELIEU #122208140, 1 1/4" DIA, CHROME FINISH
H-7	CLOSET ROD FLANGE: RICHELIEU # 8764114140, 1 1/4" DIA. CHROME FINISH
H-8	CENTERLINE STD. GRANITE COUNTERTOP SUPPORT BRACKET 15" LENGTH
H-9	STEEL OUTRIGGER
H-10	3/8" x 1 1/2" X 1 1/2" ALUMINUM ANGLE
H-11	CAM LOCK
H-12	4" BLACK METAL GROMMET
H-13	

MISCELLANEOUS

UP-1	
M-1	
M-2	
M-3	

CONSTRUCTION SPECIFICATIONS

- ☐ LEED
- ☐ FSC
- ☐ GCP
- ☒ A.W.I.- PREMIUM GRADE
- ☐ A.W.I.- CUSTUM GRADE
- ☐ A.W.I.- ECONOMY GRADE

ELEVATOR DIMENSIONS	
HEIGHT	
WIDTH	
DEPTH	
DOOR HEIGHT	
DOOR WIDTH	

☒ PRELIMINARY DRAWING FOR APPROVAL- ALL DIMENSIONS TO BE VERIFIED

☐ FINAL DRAWING- DIMENSION VERIFIED APPROVED FOR CONSTRUCTION

#	DATE	REVISION
8		
7		
6		
5		
4		
3		
2		
1		

DRAWING SET REFERENCE	DRAWINGS DATED:	JOB #: 4180
TITLE	LOUNGE/ TOWN HALL 4305	
JOB	RALIXA - 43RD & 44TH FLOORS	
LOCATION	225 LIBERTY STREET NEW YORK, NY	
GENERAL CONTRACTOR	HOLT CONSTRUCTION CORPORATION	DWG #: WP-5.0
ARCHITECT	SPECTORGROUP	
FILE: 4-RS-Base-43rd-44th Floors-Master-17.33-17.dwg	BY: D.G.R. M.G.	DATE: 9-19-17

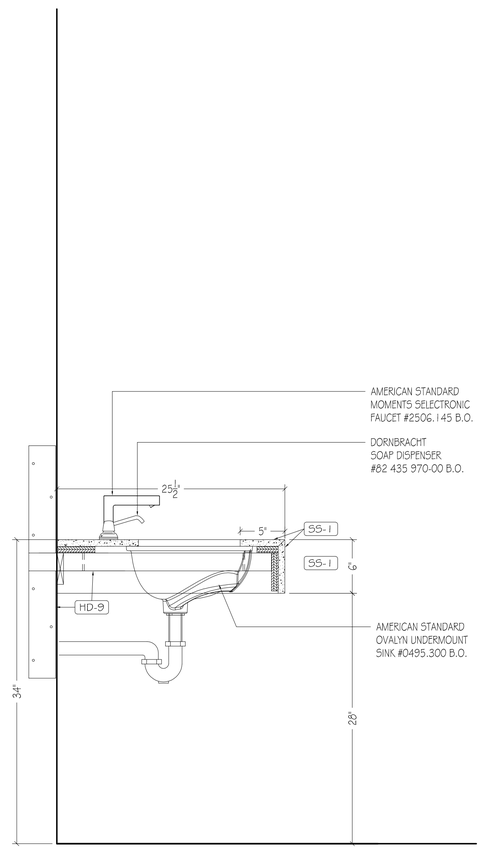

1 VERTICAL SECTION
SCALE: 1-1/2" = 1'-0"
REF: 11/A-801.00

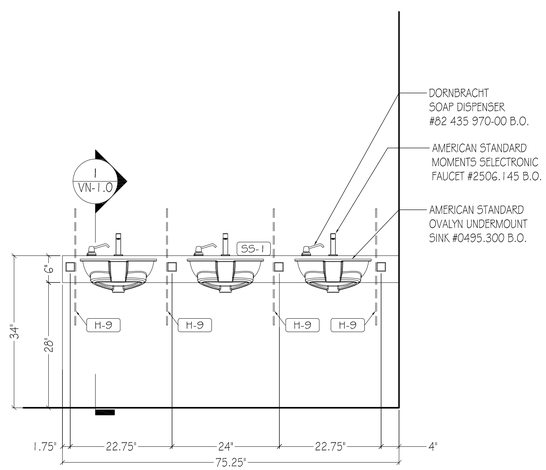

2 ELEVATION: WOMEN'S TOILET 4311
SCALE: 3/4" = 1'-0"
REF: 3/A-210.00

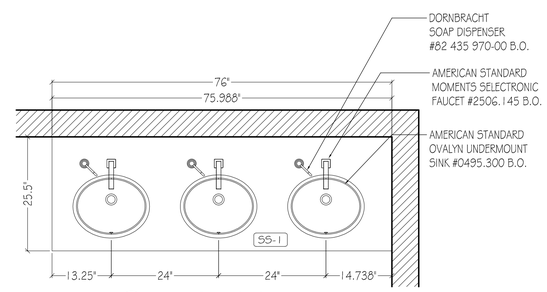

3 PLAN: WOMEN'S TOILET 4311
SCALE: 3/4" = 1'-0"
REF: 1/A-201.00

PLASTIC LAMINATE

PL-1	ROBIN REIGI #33516 CANYON HOLZFAELLER OAK.
PL-2	PIONITE #F5593 ANGEL WHITE, SUEDE FINISH
PL-3	PIONITE #SE101 BLACK, SUEDE FINISH
PL-4	PIONITE #SG228 SLATE, SUEDE FINISH
PL-5	FORMICA DECOMETAL #M2178-99 BRUSHED STAINLESS STEEL

WOOD, VENEER, MELAMINE

WD-1	ANDERSON PLYWOOD, ¾" THK. PHENOLIC BIRCH VENEER 13 PLY PLYWOOD, NATURAL FINISH
WD-2	
WD-3	
WD-4	
PF-1	
WB-1	SHOP PRIMED, FINAL PAINT B.O.
ML-1	WHITE MELAMINE
ML-2	BLACK MELAMINE
PRIMB	SHOP PRIMED, FINAL PAINT B.O.

SOLID SURFACE, STONE, METAL GLASS

SS-1	CEASARSTONE #2003 CONCRETE, ¾" THK. SQUARE EDGE DETAIL BY OTHERS
SS-2	CEASARSTONE #4004 RAW CONCRETE, ¾" THK. SQUARE EDGE DETAIL BY OTHERS
ST-1	
ST-2	
MT-1	¾" X 2" X 2" STEEL TUBE, PAINTED BLACK
MT-2	
GL-1	
GL-2	

HARDWARE

H-1	HINGES: BLUM CLIP TOP 110° CONCEALED HINGES, SELF CLOSING, SOFT CLOSE
H-2	DRAWER SLIDES: RICHELIEU #38322G24, FULL EXTENSION, 24", SOFT CLOSE
H-3	SHELF PINS: RICHELIEU #12352180, NICKLE FINISH
H-4	CAM LOCK
H-5	Z-CLIP: MONARCH METAL FABRICATION #MF375
H-6	CLOSET ROD: RICHELIEU #12220B140, 1 ¼" DIA, CHROME FINISH
H-7	CLOSET ROD FLANGE: RICHELIEU # 8764114140, 1 ¼" DIA. CHROME FINISH
H-8	CENTERLINE STD. GRANITE COUNTERTOP SUPPORT BRACKET 15" LENGTH
H-9	STEEL OUTRIGGER
H-10	¼" x 1 ½" X 1 ½" ALUMINUM ANGLE
H-11	CAM LOCK
H-12	4" BLACK METAL GROMMET
H-13	

MISCELLANEOUS

UP-1	
M-1	
M-2	
M-3	

CONSTRUCTION SPECIFICATIONS

- ☐ LEED
- ☐ FSC
- ☐ QCP
- ☒ A.W.I.- PREMIUM GRADE
- ☐ A.W.I.- CUSTUM GRADE
- ☐ A.W.I.- ECONOMY GRADE

ELEVATOR DIMENSIONS	
HEIGHT	
WIDTH	
DEPTH	
DOOR HEIGHT	
DOOR WIDTH	

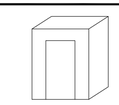

☒ PRELIMINARY DRAWING FOR APPROVAL- ALL DIMENSIONS TO BE VERIFIED

☐ FINAL DRAWING- DIMENSION VERIFIED APPROVED FOR CONSTRUCTION

#	DATE	REVISION
8		
7		
6		
5		
4		
3		
2		
1	10-21-17	REVISED PER ARCHITECTURAL RED LINES

DRAWING SET REFERENCE	DRAWINGS DATED:	JOB #: 4180
TITLE	WOMEN'S TOILET 4311	
JOB	RAUXA - 43RD & 44TH FLOORS	
LOCATION	225 LIBERTY STREET NEW YORK, NY	
GENERAL CONTRACTOR	HOLT CONSTRUCTION CORPORATION	DWG #: VN-1.0
ARCHITECT	SPECTORGROUP	
FILE: 4-30-Rauxa-D-Fl 44th Tpro-Women... 10-20-17.dwg	BY: D.G.R. M.G.	DATE: 9-19-17

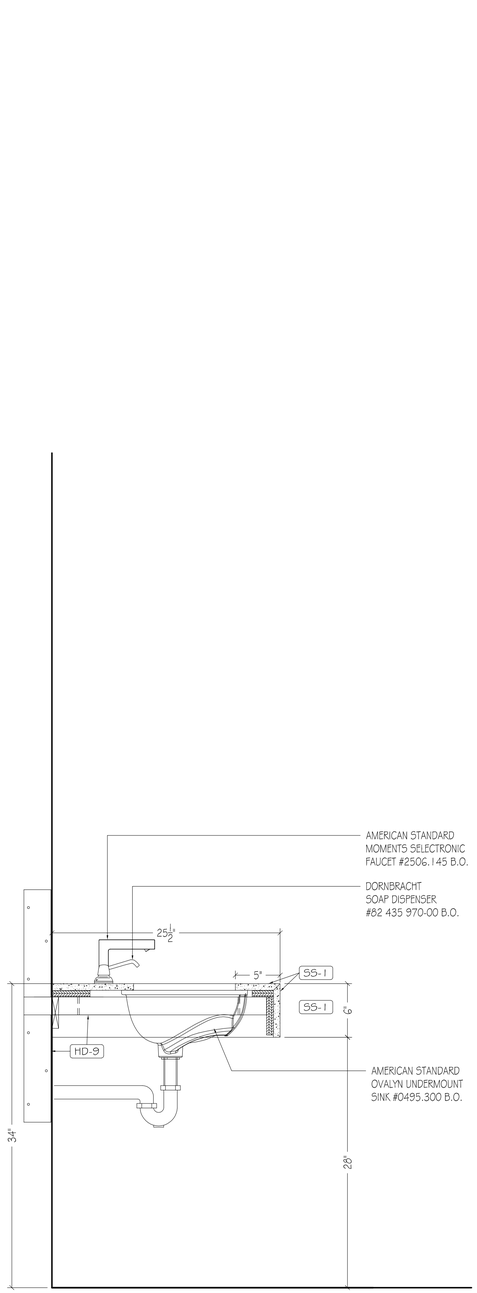

1 VERTICAL SECTION
SCALE: 1-1/2" = 1'-0"
REF: 11/A-801.00

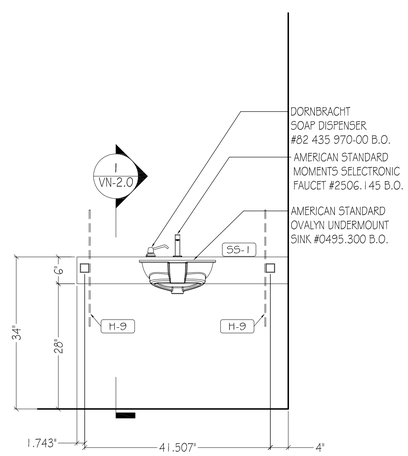

2 ELEVATION: WOMEN'S TOILET 4448
SCALE: 3/4" = 1'-0"
REF: 8/A-210.00

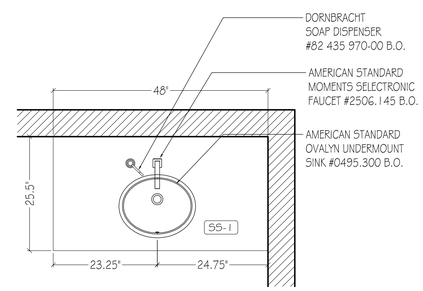

3 PLAN: WOMEN'S TOILET 4448
SCALE: 3/4" = 1'-0"
REF: 1/A-201.00

PLASTIC LAMINATE

PL-1	ROBIN REIGI #33516 CANYON HOLZFAELLER OAK.
PL-2	PIONITE #F5593 ANGEL WHITE, SUEDE FINISH
PL-3	PIONITE #SE101 BLACK, SUEDE FINISH
PL-4	PIONITE #SG228 SLATE, SUEDE FINISH
PL-5	FORMICA DECOMETAL #M2178-99 BRUSHED STAINLESS STEEL

WOOD, VENEER, MELAMINE

WD-1	ANDERSON PLYWOOD, 3/4" THK. PHENOLIC BIRCH VENEER 13 PLY PLYWOOD, NATURAL FINISH
WD-2	
WD-3	
WD-4	
PF-1	
WB-1	SHOP PRIMED, FINAL PAINT B.O.
ML-1	WHITE MELAMINE
ML-2	BLACK MELAMINE
PRIMB	SHOP PRIMED, FINAL PAINT B.O.

SOLID SURFACE, STONE, METAL GLASS

SS-1	CEASARSTONE #2003 CONCRETE, 3/4" THK. SQUARE EDGE DETAIL BY OTHERS
SS-2	CEASARSTONE #4004 RAW CONCRETE, 3/4" THK. SQUARE EDGE DETAIL BY OTHERS
ST-1	
ST-2	
MT-1	3/4" X 2" X 2" STEEL TUBE, PAINTED BLACK
MT-2	
GL-1	
GL-2	

HARDWARE

H-1	HINGES: BLUM CLIP TOP 110° CONCEALED HINGES, SELF CLOSING, SOFT CLOSE
H-2	DRAWER SLIDES: RICHELIEU #38322G24, FULL EXTENSION, 24", SOFT CLOSE
H-3	SHELF PINS: RICHELIEU #12352180, NICKLE FINISH
H-4	CAM LOCK
H-5	Z-CLIP: MONARCH METAL FABRICATION #MF375
H-6	CLOSET ROD: RICHELIEU #12220B140, 1 1/4" DIA, CHROME FINISH
H-7	CLOSET ROD FLANGE: RICHELIEU # 8764114140, 1 1/4" DIA. CHROME FINISH
H-8	CENTERLINE STD. GRANITE COUNTERTOP SUPPORT BRACKET 15" LENGTH
H-9	STEEL OUTRIGGER
H-10	3/8" x 1 1/2" X 1 1/2" ALUMINUM ANGLE
H-11	CAM LOCK
H-12	4" BLACK METAL GROMMET
H-13	

MISCELLANEOUS

UP-1	
M-1	
M-2	
M-3	

CONSTRUCTION SPECIFICATIONS

- ☐ LEED
- ☐ FSC
- ☐ QCP
- ☒ A.W.I.- PREMIUM GRADE
- ☐ A.W.I.- CUSTUM GRADE
- ☐ A.W.I.- ECONOMY GRADE

ELEVATOR DIMENSIONS

HEIGHT	
WIDTH	
DEPTH	
DOOR HEIGHT	
DOOR WIDTH	

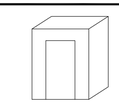

☒ PRELIMINARY DRAWING FOR APPROVAL- ALL DIMENSIONS TO BE VERIFIED

☐ FINAL DRAWING- DIMENSION VERIFIED APPROVED FOR CONSTRUCTION

#	DATE	REVISION
8		
7		
6		
5		
4		
3		
2		
1	10-21-17	REVISED PER ARCHITECTURAL RED LINES

DRAWING SET REFERENCE	DRAWINGS DATED:	JOB #: 4180
TITLE	WOMEN'S TOILET 4448	
JOB	RAUXA - 43RD & 44TH FLOORS	
LOCATION	225 LIBERTY STREET NEW YORK, NY	
GENERAL CONTRACTOR	HOLT CONSTRUCTION CORPORATION	DWG #: VN-2.0
ARCHITECT	SPECTORGROUP	
FILE: 4-80-Rauxa-0-Grl-Wmn-Toilets-Women-10-20-17.dwg	BY: D.G.R. M.G.	DATE: 9-19-17

FABRICATION NOTE:
(3) OUTRIGGERS REQ'D.
MUST BE PAINTED BLACK.

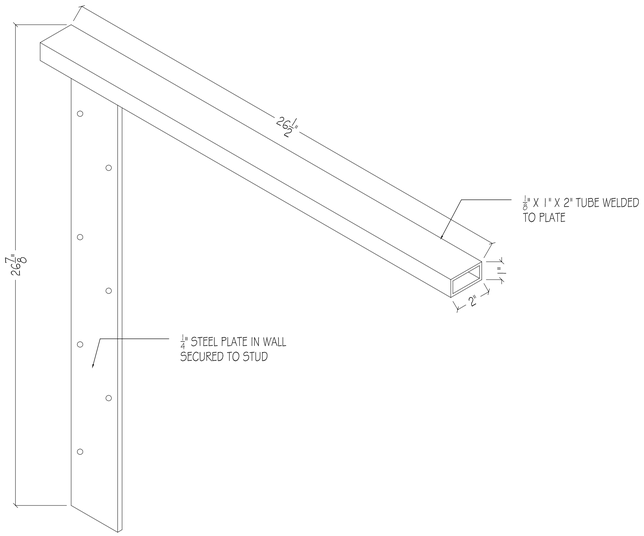

4 ISOMETRIC VIEW - RECEPTION OUTRIGGER
SCALE: 3" = 1'-0"
REF: N/A

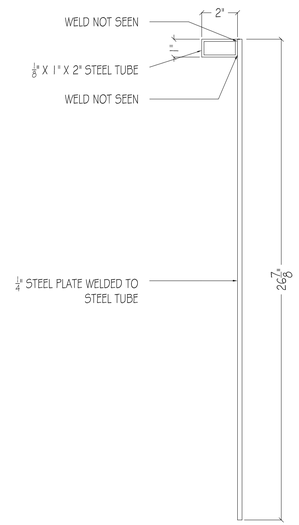

5 FRONT VIEW - RECEPTION OUTRIGGER
SCALE: 3" = 1'-0"
REF: N/A

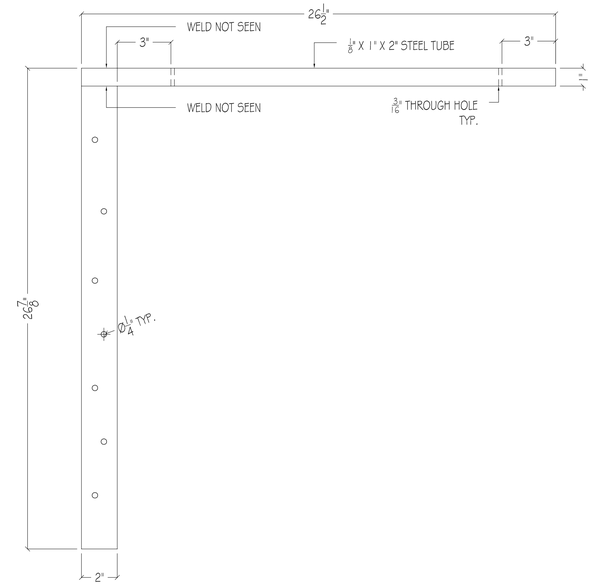

6 SIDE VIEW - RECEPTION OUTRIGGER
SCALE: 3" = 1'-0"
REF: N/A

FABRICATION NOTE:
(6) OUTRIGGERS REQ'D.
MUST BE PAINTED BLACK.

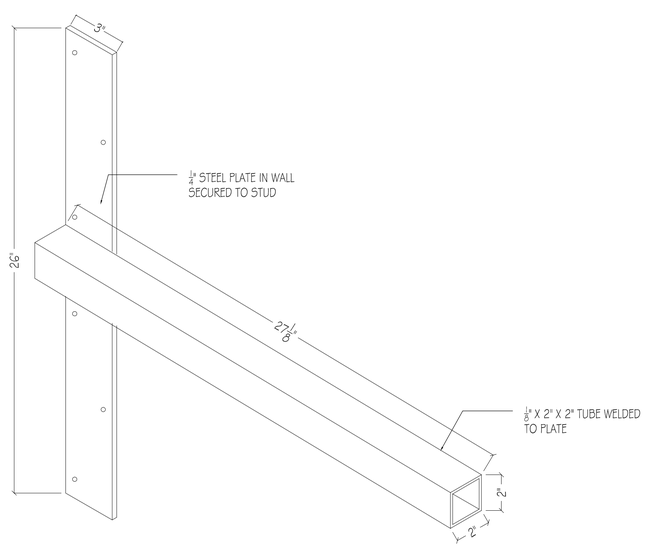

1 ISOMETRIC VIEW - RESTROOM OUTRIGGER
SCALE: 3" = 1'-0"
REF: N/A

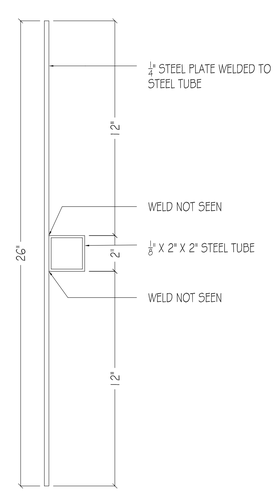

2 FRONT VIEW - RESTROOM OUTRIGGER
SCALE: 3" = 1'-0"
REF: N/A

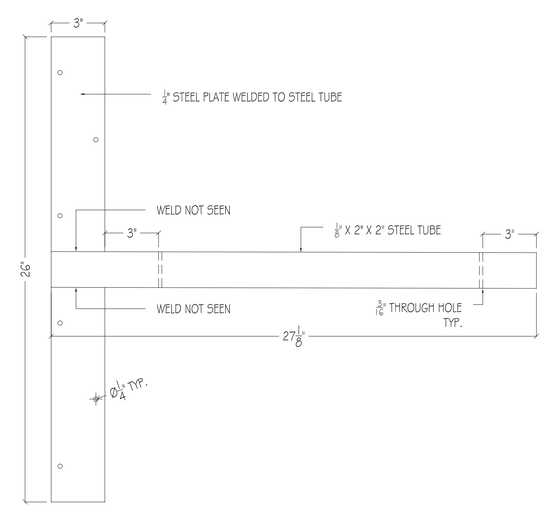

3 SIDE VIEW - RESTROOM OUTRIGGER
SCALE: 3" = 1'-0"
REF: N/A

PLASTIC LAMINATE

PL-1	ROBIN REIGI #33516 CANYON HOLZFAELLER OAK.
PL-2	PIONITE #F5593 ANGEL WHITE, SUEDE FINISH
PL-3	PIONITE #SE101 BLACK, SUEDE FINISH
PL-4	PIONITE #SG228 SLATE, SUEDE FINISH
PL-5	FORMICA DECOMETAL #M2178-99 BRUSHED STAINLESS STEEL

WOOD, VENEER, MELAMINE

WD-1	ANDERSON PLYWOOD, 3/4" THK. PHENOLIC BIRCH VENEER 13 PLY PLYWOOD, NATURAL FINISH
WD-2	
WD-3	
WD-4	
PF-1	
WB-1	SHOP PRIMED, FINAL PAINT B.O.
ML-1	WHITE MELAMINE
ML-2	BLACK MELAMINE
PRIMB	SHOP PRIMED, FINAL PAINT B.O.

SOLID SURFACE, STONE, METAL GLASS

SS-1	CEASARSTONE #2003 CONCRETE, 3/4" THK. SQUARE EDGE DETAIL BY OTHERS
SS-2	CEASARSTONE #4004 RAW CONCRETE, 3/4" THK. SQUARE EDGE DETAIL BY OTHERS
ST-1	
ST-2	
MT-1	3/4" X 2" X 2" STEEL TUBE, PAINTED BLACK
MT-2	
GL-1	
GL-2	

HARDAWARE

H-1	HINGES: BLUM CLIP TOP 110° CONCEALED HINGES, SELF CLOSING, SOFT CLOSE
H-2	DRAWER SLIDES: RICHELIEU #38322G24, FULL EXTENSION, 24", SOFT CLOSE
H-3	SHELF PINS: RICHELIEU #12352180, NICKLE FINISH
H-4	CAM LOCK
H-5	Z-CLIP: MONARCH METAL FABRICATION #MF375
H-6	CLOSET ROD: RICHELIEU #12220B140, 1 1/4" DIA, CHROME FINISH
H-7	CLOSET ROD FLANGE: RICHELIEU # 8764114140, 1 1/4" DIA. CHROME FINISH
H-8	CENTERLINE STD. GRANITE COUNTERTOP SUPPORT BRACKET 15" LENGTH
H-9	STEEL OUTRIGGER
H-10	1/4" x 1 1/2" X 1 1/2" ALUMINUM ANGLE
H-11	CAM LOCK
H-12	4" BLACK METAL GROMMET
H-13	

MISCELLANEOUS

UP-1	
M-1	
M-2	
M-3	

CONSTRUCTION SPECIFICATIONS

- ☐ LEED
- ☐ FSC
- ☐ QCP
- ■ A.W.I.- PREMIUM GRADE
- ☐ A.W.I.- CUSTUM GRADE
- ☐ A.W.I.- ECONOMY GRADE

ELEVATOR DIMENSIONS	
HEIGHT	
WIDTH	
DEPTH	
DOOR HEIGHT	
DOOR WIDTH	

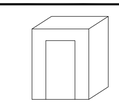

■ PRELIMINARY DRAWING FOR APPROVAL- ALL DIMENSIONS TO BE VERIFIED

☐ FINAL DRAWING- DIMENSION VERIFIED APPROVED FOR CONSTRUCTION

#	DATE	REVISION
8		
7		
6		
5		
4		
3		
2		
1	10-21-17	REVISED PER ARCHITECTURAL RED LINES

DRAWING SET REFERENCE	DRAWINGS DATED:	JOB #: 4180
TITLE	METAL OUTRIGGERS	
JOB	RAUXA - 43RD & 44TH FLOORS	
LOCATION	225 LIBERTY STREET NEW YORK, NY	
GENERAL CONTRACTOR	HOLT CONSTRUCTION CORPORATION	DWG #: MT-1.0
ARCHITECT	SPECTORGROUP	
FILE: 4-RD-Raxa-43rd 44th Floors-Metals-10-03-17.dwg	BY: D.G.R. M.G.	DATE: 9-19-17

FABRICATION NOTE:
(2) OUTRIGGERS REQ'D.
MUST BE PAINTED BLACK.

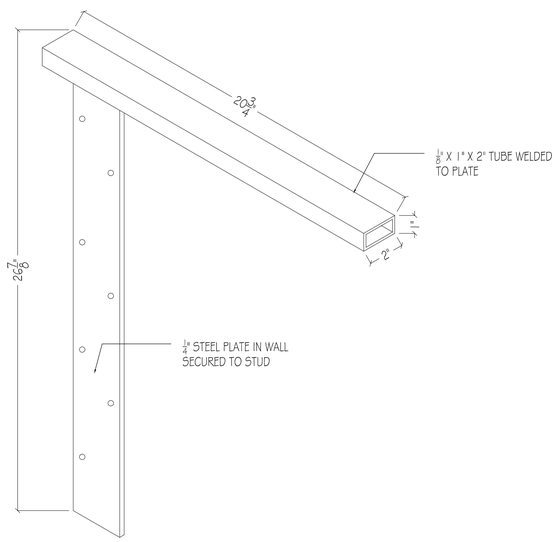

7 ISOMETRIC VIEW - RECEPTION OUTRIGGER
SCALE: 3" = 1'-0"
REF: N/A

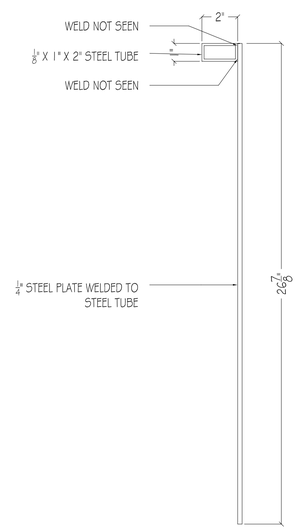

8 FRONT VIEW - RECEPTION OUTRIGGER
SCALE: 3" = 1'-0"
REF: N/A

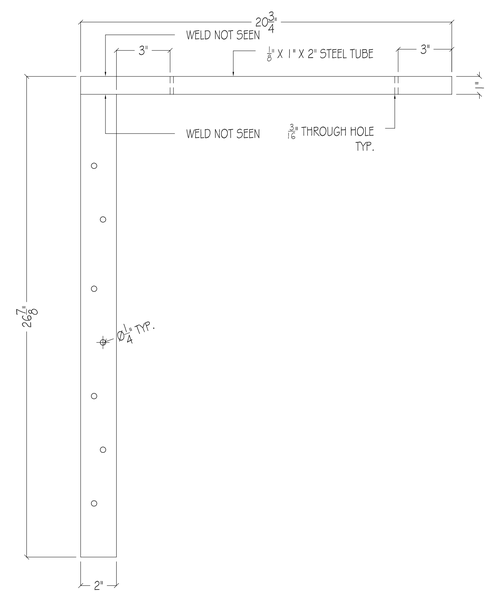

9 SIDE VIEW - RECEPTION OUTRIGGER
SCALE: 3" = 1'-0"
REF: N/A

PLASTIC LAMINATE

PL-1	ROBIN REIGI #33516 CANYON HOLZFAELLER OAK.
PL-2	PIONITE #F5593 ANGEL WHITE, SUEDE FINISH
PL-3	PIONITE #SE101 BLACK, SUEDE FINISH
PL-4	PIONITE #SG228 SLATE, SUEDE FINISH
PL-5	FORMICA DECOMETAL #M2178-99 BRUSHED STAINLESS STEEL

WOOD, VENEER, MELAMINE

WD-1	ANDERSON PLYWOOD, 3/4" THK. PHENOLIC BIRCH VENEER 13 PLY PLYWOOD, NATURAL FINISH
WD-2	
WD-3	
WD-4	
PF-1	
WB-1	SHOP PRIMED, FINAL PAINT B.O.
ML-1	WHITE MELAMINE
ML-2	BLACK MELAMINE
PRIMB	SHOP PRIMED, FINAL PAINT B.O.

SOLID SURFACE, STONE, METAL GLASS

SS-1	CEASARSTONE #2003 CONCRETE, 3/4" THK. SQUARE EDGE DETAIL BY OTHERS
SS-2	CEASARSTONE #4004 RAW CONCRETE, 3/4" THK. SQUARE EDGE DETAIL BY OTHERS
ST-1	
ST-2	
MT-1	3/4" X 2" X 2" STEEL TUBE, PAINTED BLACK
MT-2	
GL-1	
GL-2	

HARDAWARE

H-1	HINGES: BLUM CLIP TOP 110° CONCEALED HINGES, SELF CLOSING, SOFT CLOSE
H-2	DRAWER SLIDES: RICHELIEU #38322G24, FULL EXTENSION, 24", SOFT CLOSE
H-3	SHELF PINS: RICHELIEU #12352180, NICKLE FINISH
H-4	CAM LOCK
H-5	Z-CLIP: MONARCH METAL FABRICATION #MF375
H-6	CLOSET ROD: RICHELIEU #12220B140, 1 1/4" DIA, CHROME FINISH
H-7	CLOSET ROD FLANGE: RICHELIEU # 8764114140, 1 1/4" DIA. CHROME FINISH
H-8	CENTERLINE STD. GRANITE COUNTERTOP SUPPORT BRACKET 15" LENGTH
H-9	STEEL OUTRIGGER
H-10	3/8" x 1 1/2" X 1 1/2" ALUMINUM ANGLE
H-11	CAM LOCK
H-12	4" BLACK METAL GROMMET
H-13	

MISCELLANEOUS

UP-1	
M-1	
M-2	
M-3	

CONSTRUCTION SPECIFICATIONS

- ☐ LEED
- ☐ FSC
- ☐ QCP
- ■ A.W.I.- PREMIUM GRADE
- ☐ A.W.I.- CUSTUM GRADE
- ☐ A.W.I.- ECONOMY GRADE

ELEVATOR DIMENSIONS

HEIGHT	
WIDTH	
DEPTH	
DOOR HEIGHT	
DOOR WIDTH	

■ PRELIMINARY DRAWING FOR APPROVAL- ALL DIMENSIONS TO BE VERIFIED

☐ FINAL DRAWING- DIMENSION VERIFIED APPROVED FOR CONSTRUCTION

#	DATE	REVISION
8		
7		
6		
5		
4		
3		
2		
1	10-21-17	REVISED PER ARCHITECTURAL RED LINES

DRAWING SET REFERENCE	DRAWINGS DATED:	JOB #: 4180
TITLE	METAL OUTRIGGERS	
JOB	RAUXA - 43RD & 44TH FLOORS	
LOCATION	225 LIBERTY STREET NEW YORK, NY	
GENERAL CONTRACTOR	HOLT CONSTRUCTION CORPORATION	DWG #: MT-1.1
ARCHITECT	SPECTORGROUP	
FILE: 4-30-Rauxa-D-Elif-MD-Tops-Wash-10-20-17.dwg	BY: D.G.R M.G.	DATE: 9-19-17

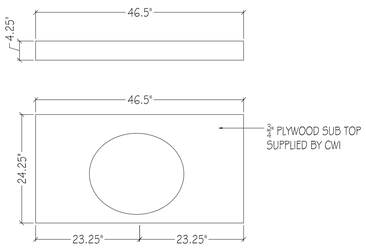

2 PLAN: WOMEN'S TOILET 4448
SCALE: 3/4" = 1'-0"
REF: NA

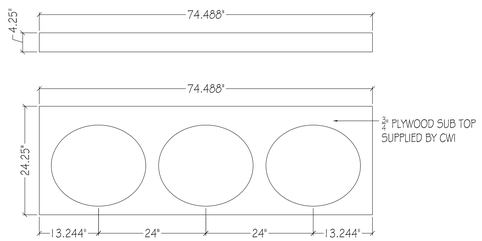

3 PLAN: WOMEN'S TOILET 4311
SCALE: 3/4" = 1'-0"
REF: NA

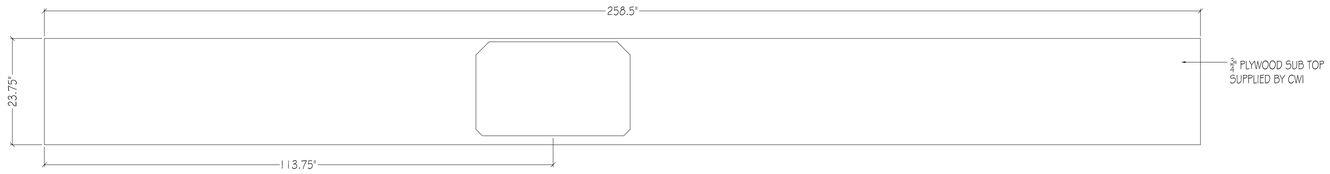

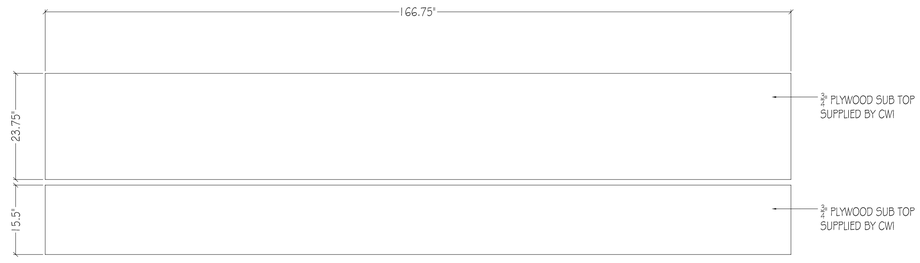

1 PLAN: PANTRY/CAFE 4306
SCALE: 3/4" = 1'-0"
REF: NA

PLASTIC LAMINATE

PL-1	ROBIN REIGI #33516 CANYON HOLZFAELLER OAK.
PL-2	PIONITE #F5593 ANGEL WHITE, SUEDE FINISH
PL-3	PIONITE #SE101 BLACK, SUEDE FINISH
PL-4	PIONITE #SG228 SLATE, SUEDE FINISH
PL-5	FORMICA DECOMETAL #M2178-99 BRUSHED STAINLESS STEEL

WOOD, VENEER, MELAMINE

WD-1	ANDERSON PLYWOOD, 3/4" THK. PHENOLIC BIRCH VENEER 13 PLY PLYWOOD, NATURAL FINISH
WD-2	
WD-3	
WD-4	
PF-1	
WB-1	SHOP PRIMED, FINAL PAINT B.O.
ML-1	WHITE MELAMINE
ML-2	BLACK MELAMINE
PRIMB	SHOP PRIMED, FINAL PAINT B.O.

SOLID SURFACE, STONE, METAL GLASS

SS-1	CEASARSTONE #2003 CONCRETE, 3/4" THK. SQUARE EDGE DETAIL BY OTHERS
SS-2	CEASARSTONE #4004 RAW CONCRETE, 3/4" THK. SQUARE EDGE DETAIL BY OTHERS
ST-1	
ST-2	
MT-1	3/4" X 2" X 2' STEEL TUBE, PAINTED BLACK
MT-2	
GL-1	
GL-2	

HARDAWARE

H-1	HINGES: BLUM CLIP TOP 110° CONCEALED HINGES, SELF CLOSING, SOFT CLOSE
H-2	DRAWER SLIDES: RICHELIEU #38322G24, FULL EXTENSION, 24", SOFT CLOSE
H-3	SHELF PINS: RICHELIEU #12352180, NICKLE FINISH
H-4	CAM LOCK
H-5	Z-CLIP: MONARCH METAL FABRICATION #MF375
H-6	CLOSET ROD: RICHELIEU #12220B140, 1 1/4" DIA, CHROME FINISH
H-7	CLOSET ROD FLANGE: RICHELIEU # 8764114140, 1 1/4" DIA. CHROME FINISH
H-8	CENTERLINE STD. GRANITE COUNTERTOP SUPPORT BRACKET 15" LENGTH
H-9	STEEL OUTRIGGER
H-10	3/4" x 1 1/2" X 1 1/2" ALUMINUM ANGLE
H-11	CAM LOCK
H-12	4" BLACK METAL GROMMET
H-13	

MISCELLANEOUS

UP-1	
M-1	
M-2	
M-3	

CONSTRUCTION SPECIFICATIONS

- ☐ LEED
- ☐ FSC
- ☐ QCP
- ☒ A.W.I.- PREMIUM GRADE
- ☐ A.W.I.- CUSTUM GRADE
- ☐ A.W.I.- ECONOMY GRADE

ELEVATOR DIMENSIONS	
HEIGHT	
WIDTH	
DEPTH	
DOOR HEIGHT	
DOOR WIDTH	

☒ PRELIMINARY DRAWING FOR APPROVAL- ALL DIMENSIONS TO BE VERIFIED

☐ FINAL DRAWING- DIMENSION VERIFIED APPROVED FOR CONSTRUCTION

#	DATE	REVISION
8		
7		
6		
5		
4		
3		
2		
1		

DRAWING SET REFERENCE	DRAWINGS DATED:	JOB #: 4180
TITLE	SUBTOPS	
JOB	RAUXA - 43RD & 44TH FLOORS	
LOCATION	225 LIBERTY STREET NEW YORK, NY	
GENERAL CONTRACTOR	HOLT CONSTRUCTION CORPORATION	DWG #: SUB-1.0
ARCHITECT	SPECTORGROUP	
FILE: 4-30-Base-Grid-Mid-Tors-Wash-(2.0)-T.dwg	BY: D.G.R. M.G.	DATE: 9-19-17